Hybrid Hydraulic System

Super Unit
SUT00S8007-30
SUT10S8007-30
SUT00D8021-30
SUT10D8021-30
SUT16D8021-30
Operation Manual

DAIKIN INDUSTRIES, LTD.
Oil Hydraulics Division

PIM00424

Introduction

Thank you very much for selecting DAIKIN hydraulic unit "Super Unit". The hydraulic unit "Super Unit" drived by IPM motor provides overwhelmingly excellent energy conservation performance and advanced functions by using our unique hydraulic technology and energy saving IPM motor system. The handling procedures, maintenance, abnormality diagnosis and specifications of this unit are described in this manual. Please carefully read , and correctly use this manual before operation.

General Notes
● Improper operation may cause unexpected accidents, shorten the life of the equipment, and reduce its performance. ● This manual and other annexes should be read before installation, operation and maintenance. After being familiar with all of the precautions and safety information of this equipment, please correctly use it. ● For detailed explanation of the unit, all figures and photographs included in this manual show the unit without covers or safety shields. To operate this unit, be sure to mount the covers and shields in the specified manner, and observe the operating procedures described in this manual. ● The contents of this operation manual are subject to change appropriately for product improvement, specification change or easier operations. ● The latest version of this manual is available through DAIKIN Oil Hydraulics Division Internet Service (http: //www.daikinpmc.com/). ● Please ensure that the contents of this manual is transmitted to the personnel using this equipment. ● The instruction manual of your machine which installed this unit should include this manual's contents. ● Please keep this operation manual, attached documents and delivery specifications in place, so that you can read them whenever required. ● For product improvement some figures in this manual may be different from the actual product. ● This operation manual is a reference for safe handling of the hydraulic unit. Please prepare the materials about safe handling for your machine, such as safe operation and maintenance manual based on various specifications and standards.

Chapter 1 Safety Precautions 1-1
1.1 Conventions of safety instructions in this manual 1-1
1.2 Safety precautions 1-1
1.2.1 Escape Clauses 1-1
1.2.2 Limitations on Applications 1-1
1.2.3 General Precautions 1-2
1.3 Precautions for Use 1-2
1.4 Using it safely 1-3
1.4.1 Installation and wiring 1-3
1.4.2 Operation 1-4
1.4.3 Maintenance and inspection 1-5
1.4.4 Disposal 1-5
Chapter 2 Features and Structure 2-1
2.1 Energy-saving 2-1
2.2 Multi-stage speed control/Multi-stage pressure control, and shockless control functions 2-2
2.3 Simplification of the system 2-2
Chapter 3 Specifications and Operating Conditions 3-1
3.1 Model identification code 3-1
3.1.1 Format 3-1
3.1.2 Manufacturing Number 3-2
3.2 Specifications and operating conditions 3-2
3.2.1 Product specification 3-2
3.2.2 Common Specifications 3-3
3.3 Typical P-Q characteristic diagram (*1,2) 3-4
3.4 Dimensions 3-5
3.5 Hydraulic circuit 3-10
Chapter 4 Names of Unit Components 4-1
Chapter 5 Start-up Procedure 5-1
Chapter 6 Confirmation of the Arrival Product 6-1
6.1 Package Contents 6-1
6.2 Form confirmation 6-1
Chapter 7 Transportation and Installation 7-1
7.1 Transportation 7-1
7.1.1 Transportation under packing condition 7-1
7.1.2 Transportation of the unit 7-1
7.2 Installation 7-2
7.2.1 Ensuring air intake/exhaust space 7-2
7.2.2 Fixation of the unit 7-3
Chapter 8 Piping 8-1
8.1 Piping 8-1
8.2 Filling hydraulic oil (Only SUT10, SUT16) 8-3

Chapter 9 Electric Wiring 9-1
9.1 Wiring diagram 9-2
9.2 Installation of breaker 9-2
9.3 Connecting the main power supply cable 9-2
9.4 Connecting the I/O signal cable 9-3
9.4.1 Digital input 9-4
9.4.2 Digital output 9-5
9.4.3 Contact output 9-6
Chapter 10 Test Run 10-1
Chapter 11 Panel Operation 11-1
11.1 Each part name of the operation panel 11-1
11.2 Function of the operation panel 11-1
11.2.1 Functional overview 11-1
11.2.2 Mode switching operation 11-2
11.3 Normal mode 11-2
11.4 Monitor mode 11-3
11.4.1 Monitor mode display item list 11-3
11.4.2 Operation of the monitor mode 11-4
11.5 Setting mode 11-5
11.5.1 Operation of the setting mode 11-5
11.6 Alarm mode 11-8
11.6.1 Operation of the alarm mode 11-8
Chapter 12 Parameter Adjustment 12-1
12.1 Parameter List 12-1
12.2 [P00: DI_A] Valid logic switch of the start-stop signal 12-7
12.3 Pressure / flow rate property and PQ selection 12-8
12.3.1 PQ selection parameter 12-8
12.3.2 PQ selection 12-9
12.3.3 [P40: PL_D] Settings when operating only at high pressure side (single) 12-10
12.4 Output signal Setting 12-11
12.4.1 Parameter 12-11
12.4.2 [P39: DO_S] Digital output selection 12-11
12.4.3 [P08: AMIX] Alarm mix output, [P07: WN_M] Warning output level 12-13
12.5 Pressure switch setting 12-13
12.5.1 Parameters list 12-13
12.5.2 Parameter description 12-14
12.6 Other functions 12-16
12.6.1 [P12: W_TM] Solenoid valve response delay time at the time of switching PQ selection 12-16
12.6.2 [P32: S_TM] and [P33: L_IN] Suppression of surge during start-up 12-16
12.6.3 [P45: AC_F] AC fan start-stop signal synchronization settings 12-17
Chapter 13 Troubleshooting 13-1
13.1 Protection function 13-1
13.1.1 Output signal of the protection function 13-1

13.1.2 Alarm 13-1
13.1.3 Warning 13-4
13.2 Periodic inspection 13-5
13.3 Cleaning and replacement 13-7
13.4 Oil cooler maintenance procedure (only for unit type SUT10, SUT16) 13-8
13.4.1 Removing the oil cooler 13-8
13.4.2 Disassembling the oil cooler 13-9
13.4.3 Clean the core 13-9
13.4.4 Clean the AC fan 13-9
13.4.5 Reassembling the oil cooler 13-9
13.5 Oil filling port (air breather) maintenance procedure (only for unit type SUT10, SUT16) 13-10
13.5.1 Removing method 13-10
13.5.2 Cleaning method 13-10
13.5.3 Mounting direction 13-10
13.6 Suction strainer maintenance procedure (only for unit type SUT10, SUT16) 13-10
13.6.1 Removing method 13-10
13.6.2 Cleaning method 13-10
13.6.3 Reassembling 13-10
13.7 Replacement of the return filter element (only for unit type SUT10, SUT16) 13-11
13.8 High-pressure Safety Valve Adjustment Procedure 13-12
Chapter 14 Output Signal Timing Chart 14-1
14.1 Timing chart when the power is turned on 14-1
14.1.1 When the setting value of "P08: Alarm output mix" is "0" or "2" 14-1
14.1.2 When the setting value of "P08: Alarm output mix" is "1" 14-1
14.1.3 Timing chart of PQ selection switch 14-2
Chapter 15 Hybrid-Win (Maintenance and Management Function) 15-1

Chapter 1 Safety Precautions

1.1 Conventions of safety instructions in this manual

In this manual, safety instructions are classified into three categories: "⚠ DANGER", "⚠ WARNING" and "⚠ CAUTION".

⚠ DANGER: Improper handling regardless of this indication causes an urgently hazardous condition that will result in death or serious injury.

⚠ WARNING: Improper handling regardless of this indication causes a potentially hazardous condition that can result in death or serious injury.

⚠ CAUTION: Improper handling regardless of this indication causes a potentially hazardous condition that may result in medium or slight injury, or property damage.

Even an item indicated as "⚠ CAUTION" may result in a serious accident depending on the situation. All instructions given in this manual include important information. Be sure to observe all of them.

1.2 Safety precautions

1.2.1 Escape Clauses

◆ DAIKIN shall not be responsible for any damage attributable to a fire, earthquake, third party's action and other accidents, as well as customer's intention, misuse or use under abnormal conditions.

◆ DAIKIN shall not be responsible for any damage incidental to use of this product or impossibility to use this product (loss of business profit, discontinuation of business).

◆ DAIKIN shall not be responsible for any accident or damage attributable to negligence in observing the instructions given in the operation manual or delivery specifications.

◆ DAIKIN shall not be responsible for any damage attributable to malfunction caused by combinations of this unit and external equipment.

◆ DAIKIN shall not be responsible for any accident or damage attributable to decomposition and remodeling by the customer.

1.2.2 Limitations on Applications

⚠ DANGER
● This product is not designed to be used in human life-support system or machine, or be used for other special purposes, such as passenger mobile, medical and nuclear. ● This unit has been manufactured under strict quality control. However, when it is used for important equipment, the equipment must be provided with a safety device to prevent malfunction of this unit from resulting in serious accident or damage.

1.2.3 General Precautions

⚠ DANGER

- Transportation, installation, piping, wiring, operations, maintenance and inspections must be conducted by qualified personnel.
- During the above work, wear protective gear required for safe work (work clothes, safety band, helmet, safety shoes, gloves and so on).
- Do not use this unit under conditions other than those specified in the catalog or delivery specifications.
- Please do not unauthorizedly modify this product by a customer. In addition, please do not disassemble it, unless the maintenance described in this manual. There is a risk of electric shock, fire, injury.
- Please install the whole system safety device, such as emergency brake, to prevent damaging the machinery or equipment in case that the product failures.
- Please do not operate it in an atmosphere with rubber corrosion or cutting oil directly exposed locations. In addition, please do not use near the combustible materials.
- Please do not operate or install this product if this product lost parts or damaged.
- Do not use the product which is not listed in the specifications of this manual. There is a risk of electric shock, fire, injury.

⚠ CAUTION

- Be sure to conduct daily inspections (described in this manual or attached documents).
- Do not apply external force to this unit. (Do not step on, or pound on this unit.) Otherwise, you may suffer from injury, or the unit may be damaged.

1.3 Precautions for Use

(1) In this hydraulic unit, the motor pump unit is equipped with vibration suppressing rubber to prevent vibration of the motor pump unit from being conveyed to the whole unit. For this purpose, the discharge pipe provides a large degree of freedom. Therefore, when connecting the discharge pipe, be careful that the discharge pipe will not touch the cover even if the pipe shakes with reaction force of the hose.
The piping to the unit should be connected with a hose, so that vibration of the motor pump unit will not be conveyed to the machine.

(2) This hydraulic unit is equipped with an AC fan for cooling of hydraulic oil and motor.
To ensure spaces for air intake and exhaust, do not place an obstacle at 10 cm or shorter distance from the fan motor air intake and exhaust planes.

(3) Frequently turning ON/OFF the power supply causes the controller service life to be remarkably shortened. If you start and stop the hydraulic unit repeatedly by turning ON/OFF the power supply at intervals of 8 minutes or less, use the “start/stop” function using the start/stop signal.

(4) If you use this product in a hydraulic circuit fitted with in-line check valve on the pump discharge side, it will not be able to control the pressure reducing of the load side. In addition, if the hydraulic circuit has accumulators, please use check valve to prevent reverse flow to the pump side from the accumulator circuit. When the power supply is turned OFF, because of the reverse flow, the motor will become a generator which may damage the controller.
If load is applied to the pump when the power is turned on, there is a possibility that the motor does not start properly. Please do not apply load to the pump for 5 seconds from power-on.

(5) This hydraulic unit uses an IPM motor, which generates counter-electromotive force during changeover (regenerative operation). If the motor is frequently turned ON/OFF in the operating condition that easily generate counter-electromotive force (a large load volume causes a large load reaction force accordingly), it causes regenerative overload, resulting in unit stop.

(6) This hydraulic unit is equipped with a safety valve.This safety valve has been set to a specified pressure before shipment. However, the set pressure of the safety valve may decrease while the machine is repeatedly used for a long period, or due to contaminants in the hydraulic oil.

If this unit is continuously used in the state that the safety valve is actuated, it may output an alarm due to a temperature rise and so on.In this case, re-adjust the high pressure safety valve pressure setting according to “13.8 High-pressure Safety Valve Adjustment Procedure” in this instruction manual.

（7） If it is continuously used at the highest pressure, please follow the flowrate in the table below.

■Continuous flow rate at the highest pressure

Product Type	Flowrate
SUT00S8007-30 SUT10S8007-30	19L/min or less
SUT00D8021-30 SUT10D8021-30 SUT16D8021-30	14L/min or less

1.4 Using it safely

This manual and other annexes should be read before installation, operation and maintenance. After being familiar with all of the precautions and safety information of this equipment, please correctly use it.

1.4.1 Installation and wiring

⚠ DANGER

- Only the qualified personnel can do the wiring work. There is a risk of electrical shock or fire.
- Wiring worker should take safety measures, such as wearing long sleeves and gloves, for injury prevention.
- Wiring worker should take safety measures , such as wearing long sleeves and gloves, to prevent electric shock or fire due to static electricity.
- Please wire after completing the installation. There is a risk of electrical shock or fire.
- Please wire after turning OFF the input power. There is a risk of electrical shock.
- If there is necessary to wire again after the power is turning ON, please make sure the motor is stopped and the input power is turned OFF 5 minutes or more. There is a risk of electrical shock.
- Connect the no-fuse breaker and electric leakage breaker that conforms to EN60947-2 to the power supply line. There is a risk of electrical shock or fire. Please refer to the "9.2 Breaker Installation " for breaker capacity information.
- Please connect the ground terminal by the D class grounding method (formerly Class 3 grounding) . There is a risk of electrical shock or fire.
- Please prevent the screws, conductive materials (for example metal piece), wood chips, flammable matter (oil) entering the internal controller. There is a risk of electric shock, fire, or accident.
- Please do not use it near water or flammable materials, or in corrosive atmosphere or atmosphere of inflammable gas. There is a risk of electric shock or fire.
- Do not scratch or apply force to the harness, and do not place heavy objects on the harness, pinch or bend it. There is a risk of electric shock or damage.
- Please use the eye bolt to move the product. There is a danger of falling, if lift it by pump piping.
- Please do not operate or install this product if this product lost parts or damaged. There is a risk of accident.
- There is an orifice check valve in the discharge line in this hydraulic unit. It is important to set a pressure release circuit, if the high response performance, such as pressure relief, is required. In addition, if the volume of the load side is large, at the time of shutdown, the fluid sound may be generated from the orifice portion. But it is not a malfunction.

⚠ CAUTION
● Please make sure the installation environment meets the requirements. There is a risk of fire or accident. ● Please install in somewhere can withstand its weight. There is a risk of accident. ● Please do not apply static electricity to terminals. There is a risk of accident. ● Please make sure that the input power supply voltage is equal to the rated voltage specification. There is a risk of fire or accident. ● Check the terminal arrangement and terminal symbols, please do not connect to the wrong line. ● Please do not do the withstand voltage test. There is a risk of damage. ● Please do not do the megger test for the control circuit. There is a risk of damage. ● Please take measures to prevent the malfunction of the equipment and nearby sensors from electromagnetic noise. ● Please do not apply strong shock to the product. There is a risk of accident. ● Do not step on, or place heavy objects on the product. There is a risk of electric shock, accident or damage. ● Please place the product in permissible temperature and humidity ambient. There is a risk of malfunction and shorter service life. ● In order to exert a superior energy-saving performance, the hydraulic unit has a double-pump structure for single and confluence switching by a solenoid valve. If the operating point of the machine is close to the switching point of the solenoid valve, it is possible that the instability phenomenon may occur. In this case, please change the settings of flow rate (qH) or pressure (PL) lower than the switching point (refer to page [P00] ~ [P03]). It can also be stabilized by adjusting the width of the dead zone which is near the switching point (refer to page 12-3 [P16] ~ [P17]).

1.4.2 Operation

⚠ DANGER
● Please do not touch the switch with wet hands. There is a risk of electrical shock. ● When the power is being supplied, please do not remove or insert terminals or change wires. There is a risk of electrical shock, damage or accidents. ● Please do not frequently turn on or turn off the power. There is a risk of accident.

⚠ CAUTION
● Please set the pressure and flow rate in the permissible range of the machine. There is a risk of accident ● Before operation, please set the parameters according to the machine. There is a risk of damage or mechanical failure. ● Before operation, please make sure that it can be switched into emergency stop situation at any time. There is a risk of damage or mechanical failure. ● When the power failure occurs, the product may suddenly restarts after the power is restored, please do not stay near the machine. There is a risk of injuries. Please adjust the machine to ensure its safety even restarting it. ● If the power is turned off just for a while or the power is being supplied, because the electronic equipment and heat dissipation fins may be very hot, please do not touch it. There is a risk of burns.

1.4.3 Maintenance and inspection

⚠ DANGER
● Only the qualified personnel can carry out the maintenance and inspection. There is a risk of electrical shock or injuries. ● Before operation please make sure the input power supply is OFF. There is a risk of electrical shock. ● Please make sure the motor is stopped, and the power supply is cut off for five minutes or more. There is a risk of electrical shock. ● When the power is being supplied, please do not remove or insert terminals or change wires. There is a risk of electrical shock, damage or accidents.

⚠ CAUTION
● Please wear gloves and protective goggles when operation. ● Please do not directly touch the controller board. It may be damaged by static electricity. ● Please do not do the voltage resistance test. The product may be damaged. ● Please do not do the megger test for the control circuit. There is a risk of damage. ● Please do not disassemble this product. There is a risk of electric shock or injuries.

1.4.4 Disposal

⚠ CAUTION
● Please connect the specialized supplier to dispose this product (as a general industrial waste). There is a risk of environmental pollution by solder (lead), and the like.

Chapter 2 Features and Structure

2.1 Energy-saving

- By using the highly efficient IPM motor driving system that DAIKIN originally developed, this hydraulic unit remarkably improved the energy efficiency of the motor.
- Two fixed displacement pumps (high-pressure small-capacity, low-pressure high-capacity) are adopted in this double-pump specification. In this system, single/confluence mode can be automatically switched according to load pressure. When the flow rate is necessary, the high-pressure small-capacity pump and the low-pressure high-capacity pump are joined together to rotate at a high speed. When the flow rate is not necessary (for example, pressure holding state), only the high-pressure small-capacity pump rotates at a low speed. In this way, significant energy saving effect is achieved.

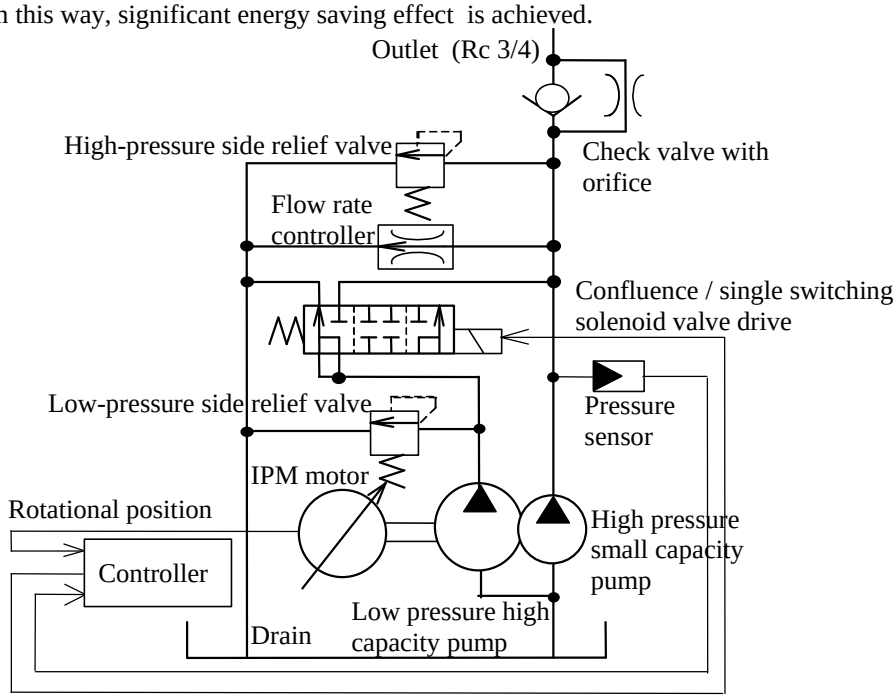

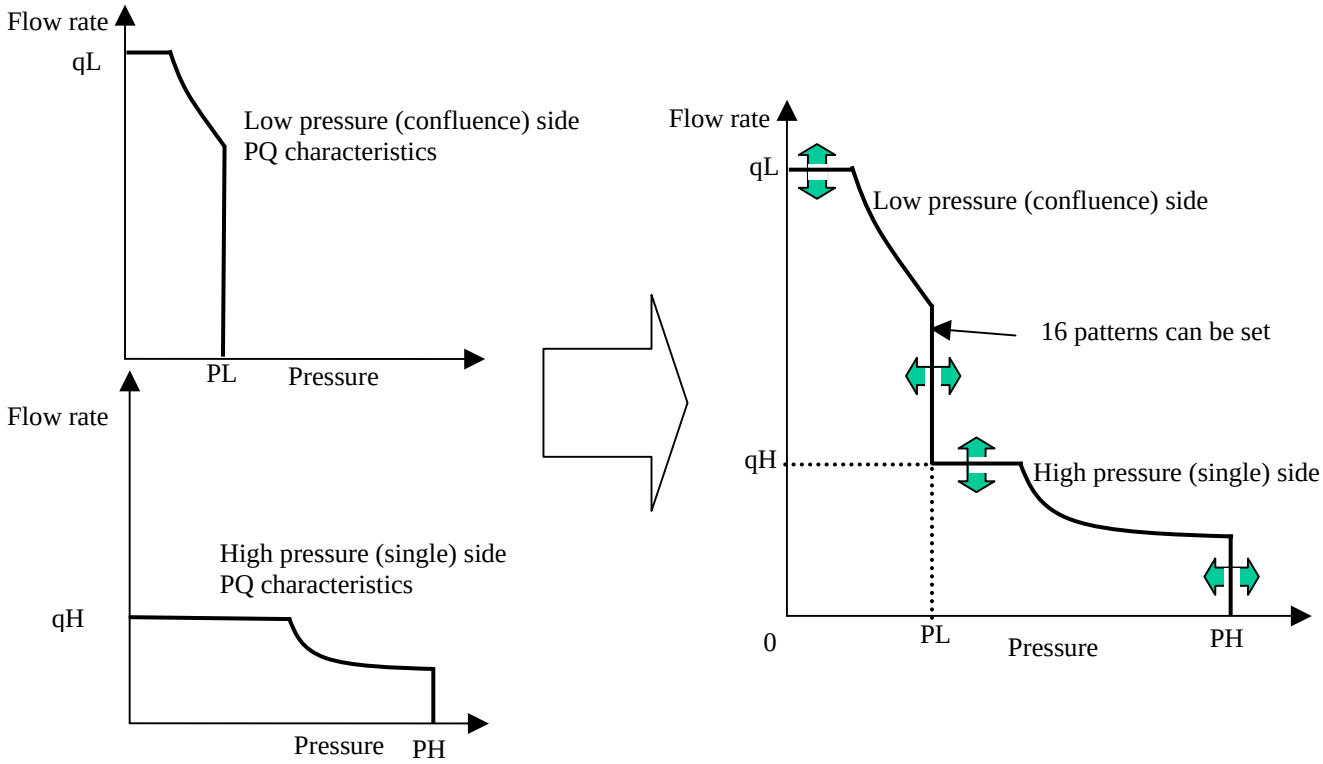

2.2 Multi-stage speed control/Multi-stage pressure control, and shockless control functions

- The Super Unit enables multi-stage pressure control/flow rate control by selecting 16 patterns of P-Q characteristics that have been registered in the controller from the master machine.
- The Super Unit enables shockless control by setting/adjusting the rising/falling time at changes of the P-Q characteristics.

2.3 Simplification of the system

- The functions that have been controlled by valves in a conventional system can be controlled by pumps. Therefore, when this system is used for high-speed/low-speed switching (for a press etc.) and multi-stage pressure control applications, the system configuration can be simplified, and costs can be reduced.

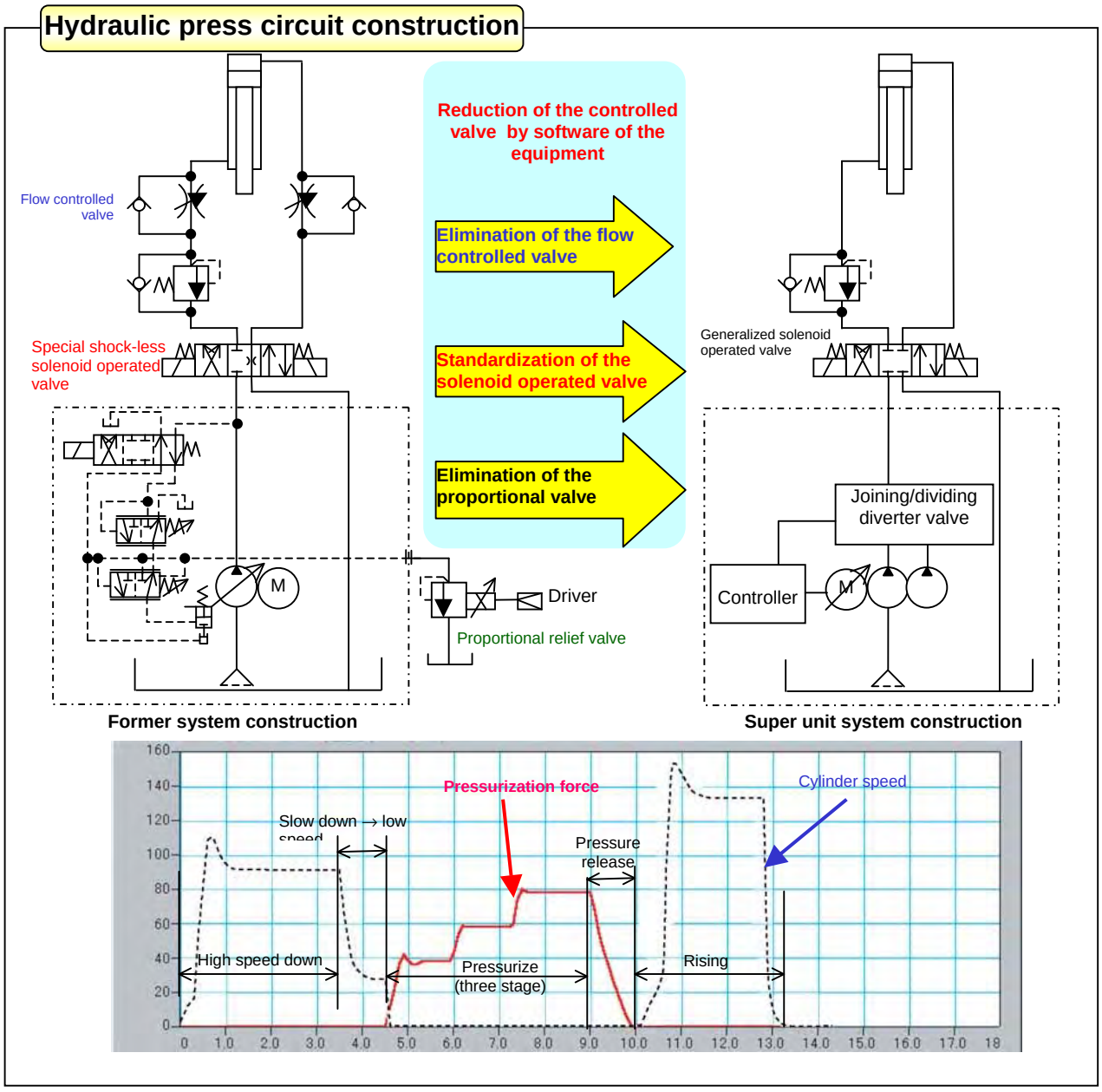

Chapter 3 Specifications and Operating Conditions

3.1 Model identification code

3.1.1 Format

(a)	(b)	(c)	(d)	(e)		(f)		(g)	(h)		(i)	(j)
SUT	**	*	**	**	-	30	-	*	**	-	*	***

(a) Series name
・SUT: SUT series

(b) Tank capacity
・00: No tank
・10: 100L tank
・16: 160L tank

(c) Pump type
・S: Single pump
・D: Double pump

(d) Maximum pump discharge rate
・80: 83.0 L/min

(e) Maximum operating pressure
・07: 7.0 MPa
・21: 20.6 MPa

(f) Design No.
・Advances according to model change

(g) Selection of function *
・C: Communication function (RS232C)
・P: Analog input command function
・No symbol: Standard product

(h) Option number
・Refer to the following table

(i) Control system
・A: With control system
・N: Without control system

(j) Non-standard number

● Option number

■Motor pump type (SUT00)

Option number	Description
02	Controller cover
03	DC reactor
04	Power, control separation function

■Unit type (SUT10, SUT16)

Option number	Description
01	Unit cover
02	Controller cover
03	DC reactor
04	Power, control separation function
05	Water paste
06	Water leakage
07	Liquid level switch
08	Temperature switch
09	Thermometer
10	Micro separator
The number after 11 is a combination of the 02-10 option number.	

3.1.2 Manufacturing Number

(i)	(j)		(k)		(l)
**	**	-	**	-	*****

（i）Hardware revision history
（j）Software revision history
（k）Manufacture Date (*1)
（l）Serial No.

*1 First digit Year of manufacture (one digit of the western calendar). For example: 7 = 2007
Second digit Manufacture month 1 ~ 9 : January ~ September
0 : October
X : November
Y : December

3.2 Specifications and operating conditions

3.2.1 Product specification

Product type		SUT00S8007-30 SUT10S8007-30	SUT00D8021-30 SUT10D8021-30 SUT16D8021-30
Maximum operating pressure	(MPa)	7.0	20.6
Maximum flow rate (*1)	(MPa)	1.5	3.5
Operating pressure adjusting range	(L/min)	83.0	
Operating discharge rate adjusting range (*1)	(MPa)	1.5 ～ 7.0	1.5 ～ 20.6
Pump capacity	(L/min)	11.6 ～ 83.0	
Maximum operating pressure	(cm^3/rev)	19.28	Low pressure: 19.28 High pressure: 6.68

*1 The maximum flow rate is a theoretical value, not a guaranteed value.

⚠ CAUTION

- When shipped from the factory, the maximum flow rate was set. [Low pressure (confluence) side flow rate setting value]
- Though the pressure and flow rate can be set beyond the adjustment range, please be sure to use it within the pressure range and flow rate range.
- The high-pressure safety valve is installed in this hydraulic unit, and pressure is set as shown in the following table.

Product type	High pressure safety valve setting pressure
SUT00S8007 / SUT10S8007	Maximum working pressure +0.5MPa (7.5MPa)
SUT00D8021 / SUT10D8021 SUT16D8021	Maximum working pressure +2.0MPa (22.6MPa)

However, if it is necessary to minimize the surge pressure of actuator operation, please make adjustments in accordance with the "13.8 high-pressure safety valve adjustment procedure".

- If it continuously operate at the highest pressure, please follow the flow rate requirement showing in the table below.

Product type	Flow rate
SUT00S8007-30 SUT10S8007-30	19L/min or less
SUT00D8021-30 SUT10D8021-30 SUT16D8021-30	14L/min or less

- Please check product specifications (in the format drawing) for other specifications.

3.2.2 Common Specifications

Hydraulic oil (Note 1)	Dedicated mineral hydraulic oil / Wear-resistant hydraulic oil (For recommended brands, refer to DAIKIN "Hydraulic Equipment General Catalog (HK196)".) ・ Viscosity grade: ISO VG 32 to 68 ・ Viscosity range: 15 to 400 mm2/s ・ Pollution degree: NAS Class 9 or lower level
Power supply	3φ 200V/50Hz 200V/60Hz 220V/60Hz Power supply voltage fluctuation tolerance range is ±10%.(Note2)
External input signal (3ch)	Photocoupler isolation, DC24V (up to 27V) 5mA/1ch
External output signal (relay output) (1ch)	Relay output contact capacity: DC30V 0.5A (resistance of load) 1c contact
External output signal (dry contacts) (2ch)	Photocoupler isolation, open collector output DC24V 50mA or less / 1ch
Standard paint color	Ivory white (Munsell 5Y7.5 / 1)
Tank oil temperature	0 to 60 ℃ (recommended operating temperature range: 15 to 50 ℃)(Note3)
Operating ambient temperature	0 to 40 ℃
Storing ambient temperature	-20 to 60 ℃
Humidity	85% RH or less (No condensation)
Height above the sea level	1,000 m or less
Installation place	Indoor (Be sure to fasten the unit with bolts.)
Others	・ Be sure to mount a no-fuse breaker (three-pole) in main power supply circuit. ・ Make sure that the electric wiring conforms to European Norm EN60204-1. ・ If you frequently turn ON/OFF the power supply for this unit, the controller service life will be remarkably deteriorated. If you intend to start and stop the unit at intervals of eight minutes or less, use the start/stop signal function of this unit. However, if the start-stop function is being used, please make sure the interval time is upto one minute or more. ・ Be sure to connect the ground terminal.

（Note 1） Please contact us if other kinds of oil besides mineral hydraulic oil (water-glycol) are going to be used.

（Note 2） Even in the tolerance range, if the change is + side, there is a possibility that when

responding the regenerative overload alarm raises and the unit stops depending on the main machine's operating conditions and the load conditions. If the change is – side, the output characteristics may become low.

（Note 3） If its operating temperature beyond the recommended temperature range, the pressure pulsation may increase, the discharge flow rate may reduce, but it is not a malfunction.

3.3 Typical P-Q characteristic diagram (*1,2)

SUT00S8007-30
SUT10S8007-30

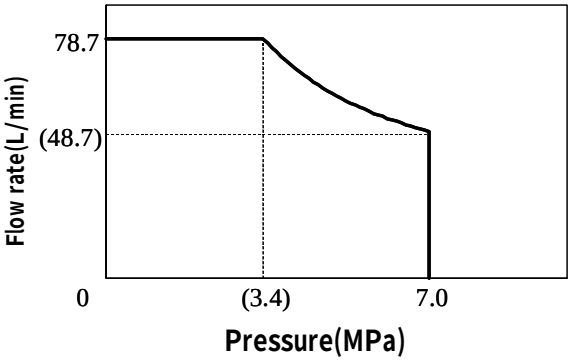

SUT00D8021-30
SUT10D8021-30
SUT16D8021-30

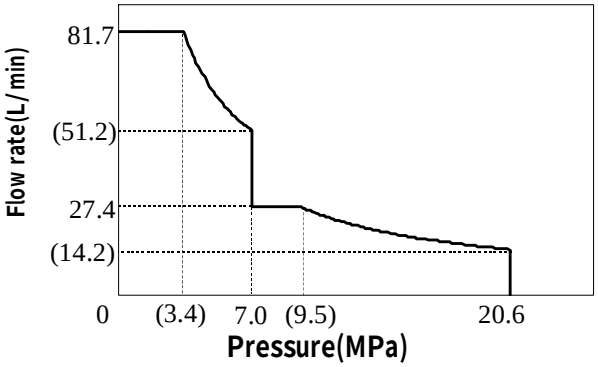

*1 The above charts show the typical characteristics when the oil temperature is 40 °C.
*2 The above PQ characteristics show the usable range by actual flow rate.

3.4 Dimensions

■Motor Pump Type (SUT00)
SUT00S8007-30

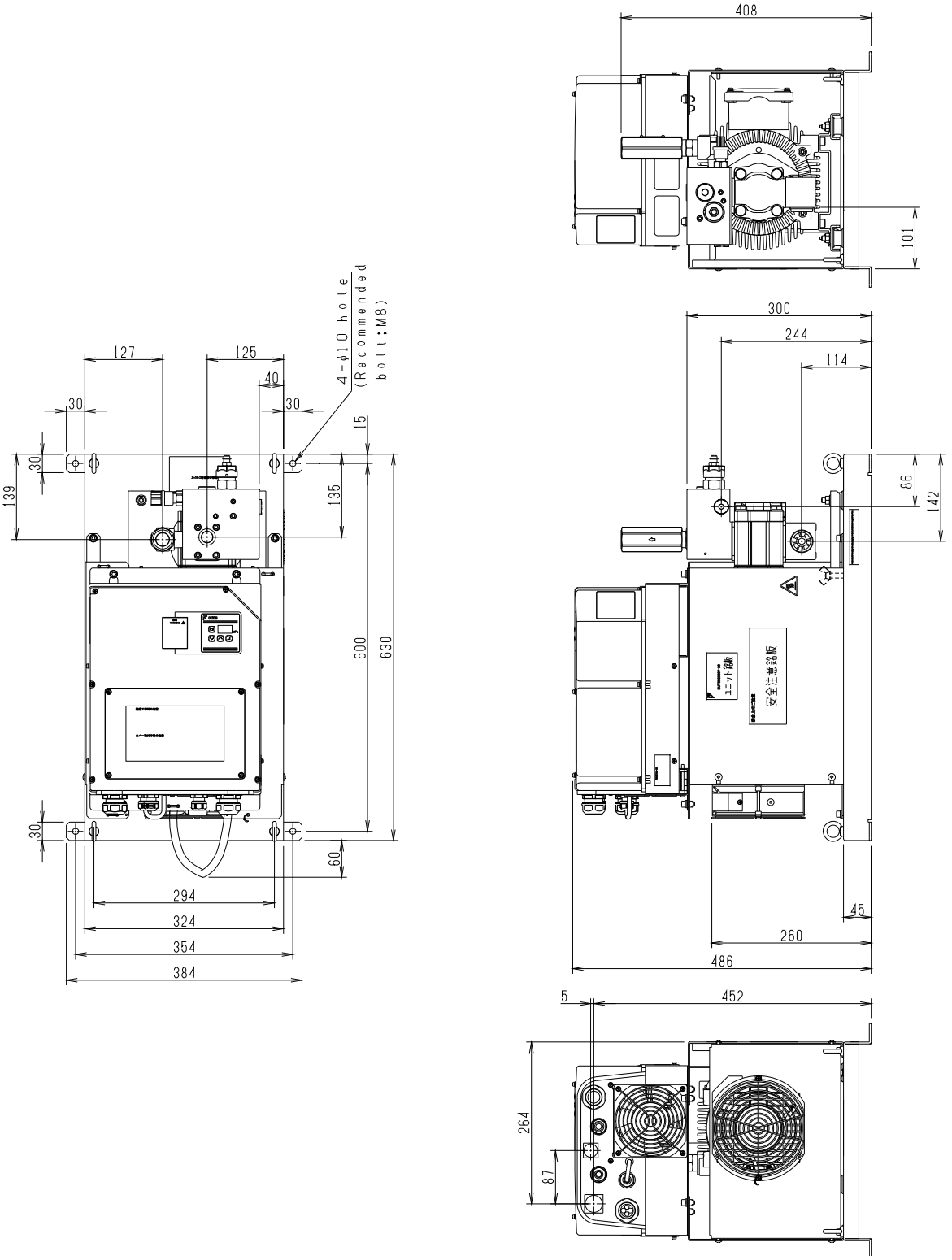

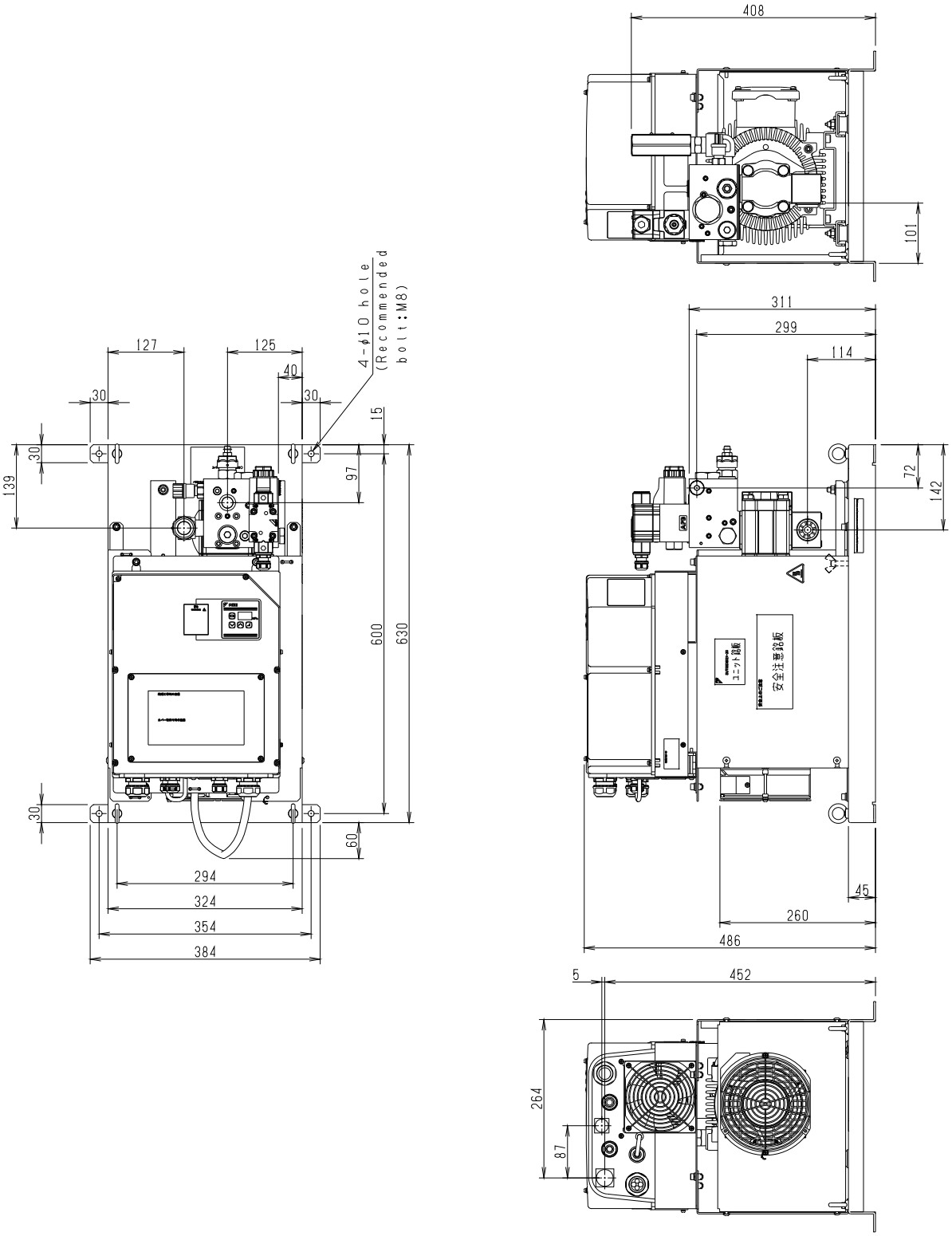
408
101
311
299
114
72
142
45
260
486
5
452
264
87
127
125
40
30
30
15
4-φ10 hole
(Recommended
bolt:M8)
30
139
97
600
630
30
60
294
324
354
384
ユニット銘板
安全注意銘板

■Unit Type (SUT10, SUT16)
SUT10S8007-30

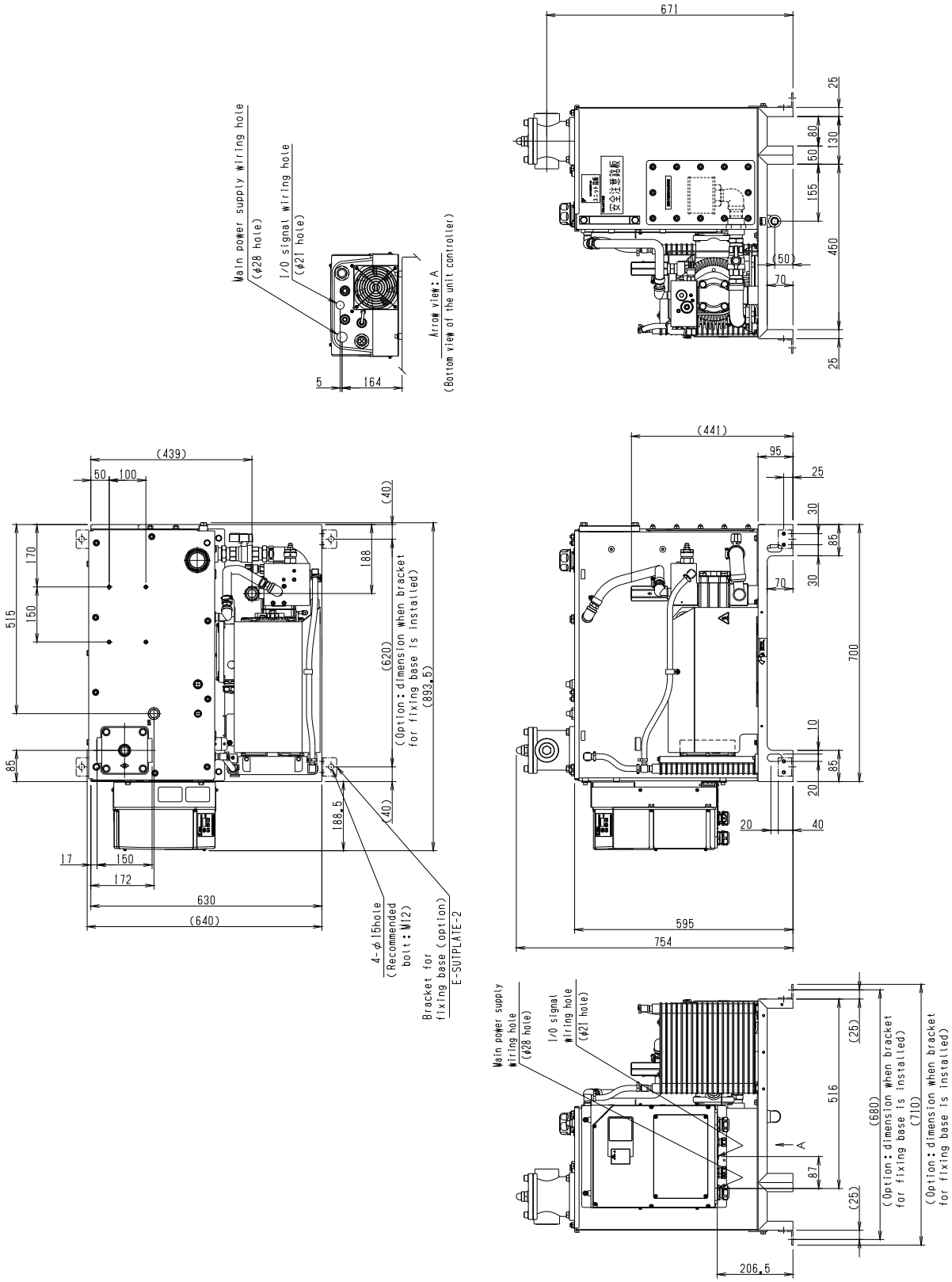

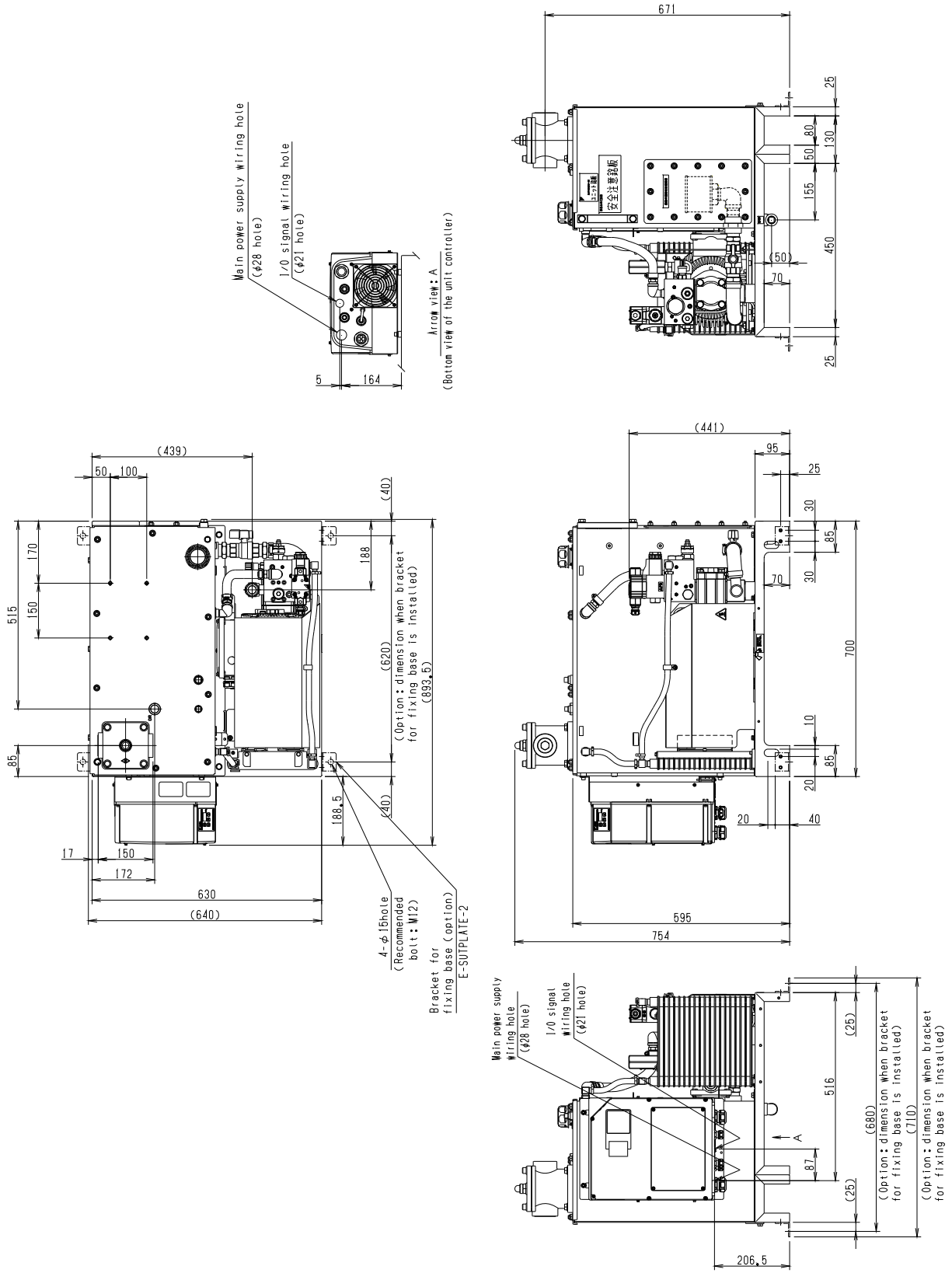
Main power supply Wiring hole
(φ28 hole)
I/O signal wiring hole
(φ21 hole)
Arrow view : A
(Bottom view of the unit controller)
5
164
671
25
80
130
50
155
450
(50)
70
25
安全注意銘板
(439)
50
100
(40)
170
188
515
150
(620)
(Option : dimension when bracket
for fixing base is installed)
(893.5)
85
188.5
(40)
17
150
172
630
(640)
4-φ16hole
(Recommended
bolt : M12)
Bracket for
fixing base (option)
E-SUTPLATE-2
(441)
95
25
30
85
70
30
700
10
85
20
20
40
595
754
Main power supply
Wiring hole
(φ28 hole)
I/O signal
wiring hole
(φ21 hole)
(25)
516
A
87
(25)
(680)
(Option : dimension when bracket
for fixing base is installed)
(710)
(Option : dimension when bracket
for fixing base is installed)
206.5

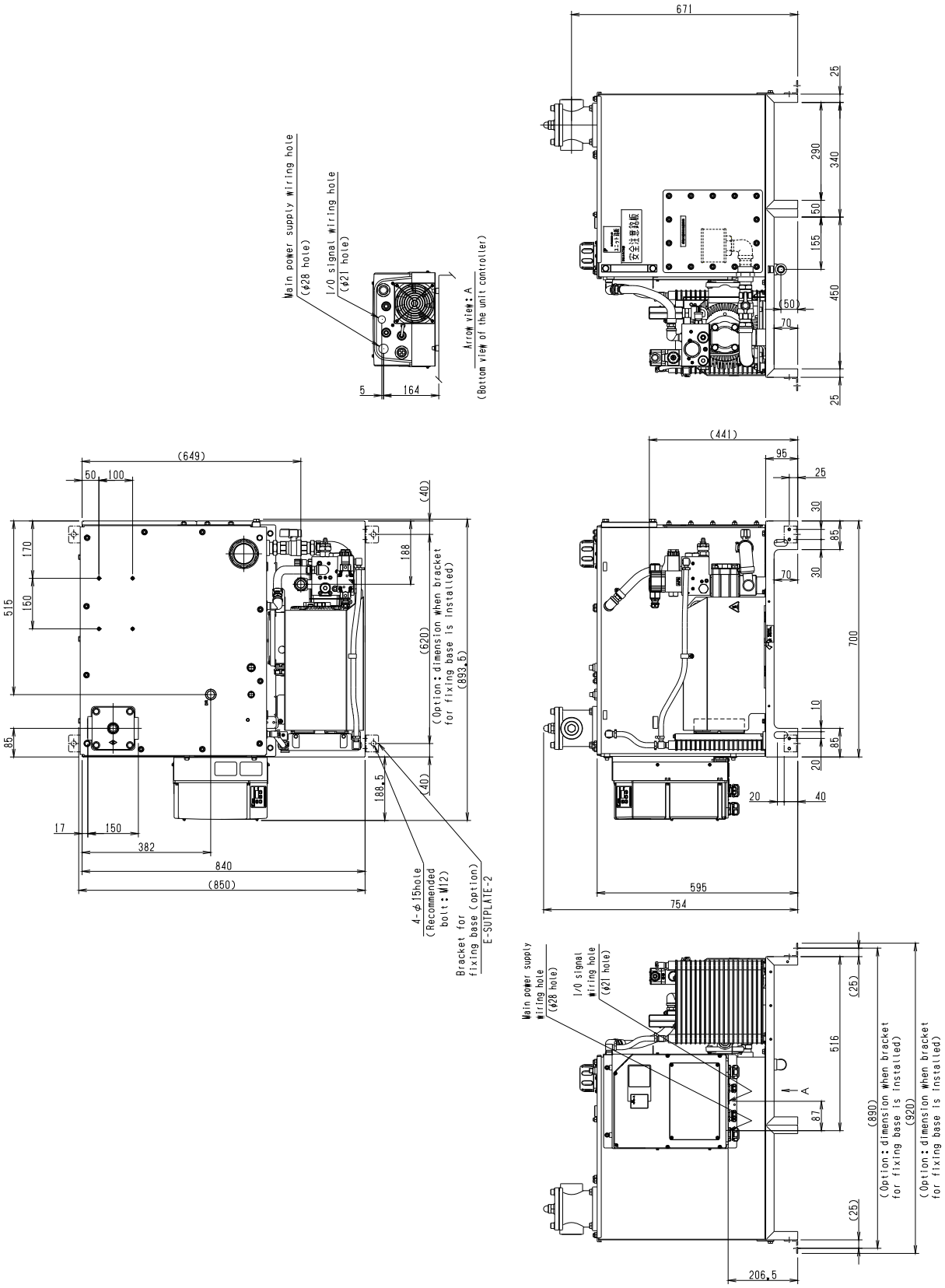
Main power supply wiring hole
(φ28 hole)
I/O signal wiring hole
(φ21 hole)
Arrow view: A
(Bottom view of the unit controller)
5
164
671
25
290
340
50
155
460
(50)
70
25
(649)
50
100
(40)
170
150
515
188
(620)
(Option: dimension when bracket
for fixing base is installed)
(893.6)
85
188.5
(40)
17
150
382
840
(850)
4-φ15hole
(Recommended
bolt: M12)
Bracket for
fixing base (option)
E-SUTPLATE-2
(441)
95
25
30
85
70
30
700
10
85
20
20
40
595
754
Main power supply
wiring hole
(φ28 hole)
I/O signal
wiring hole
(φ21 hole)
(25)
516
A
87
(890)
(Option: dimension when bracket
for fixing base is installed)
(920)
(Option: dimension when bracket
for fixing base is installed)
(25)
206.5

3.5 Hydraulic circuit

■Motor Pump Type (SUT00)
● SUT00S8007-30

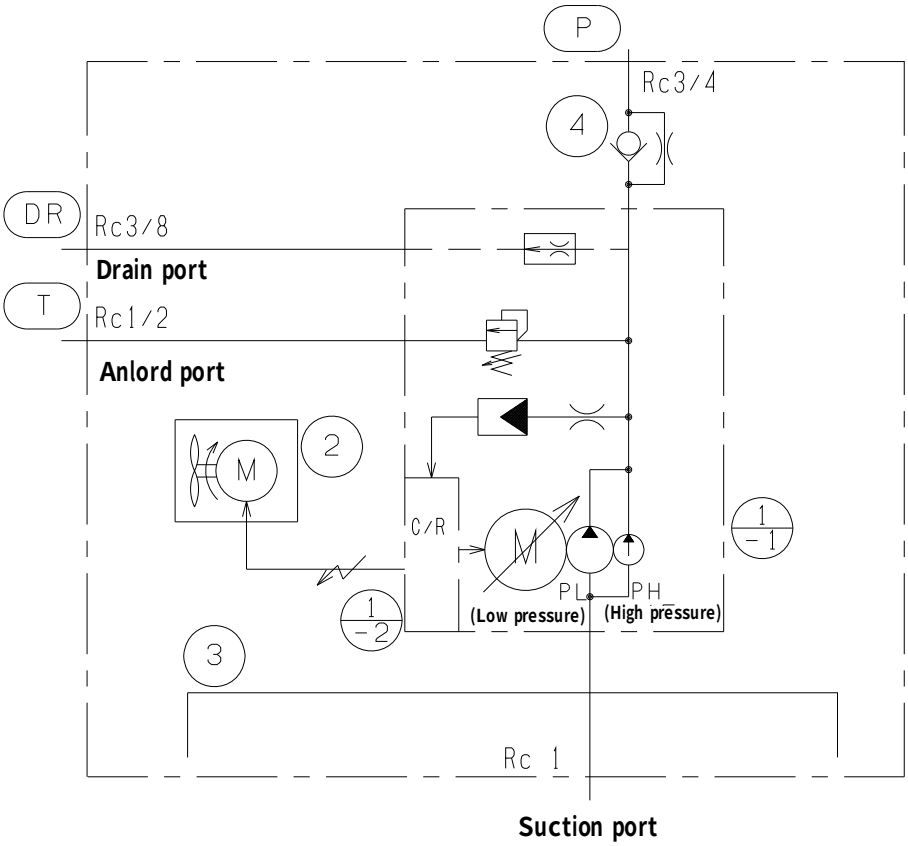

Part number	Name
1-1	Inverter-driven motor pump
1-2	Controller
2	AC fan
3	Base
4	Check valve

● SUT00D8021-30

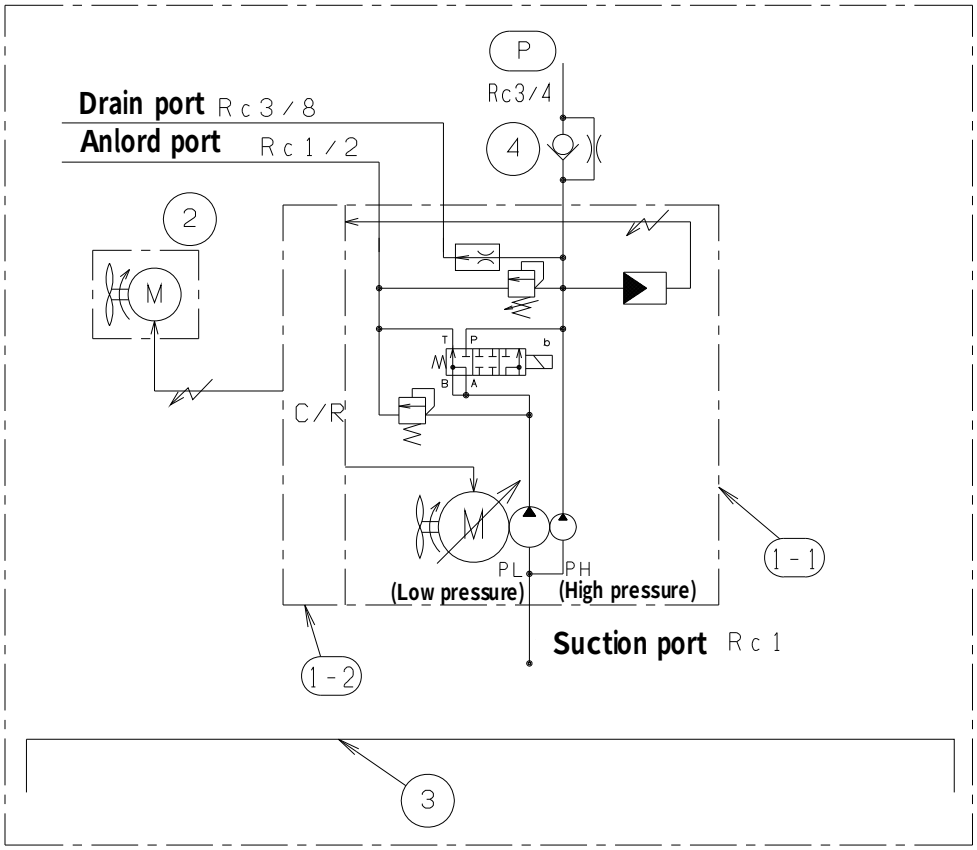

Part number	Name
1-1	Inverter-driven motor pump
1-2	Controller
2	AC fan
3	Base
4	Check valve

■Unit Type (SUT10, SUT16)
● SUT10S8007-30

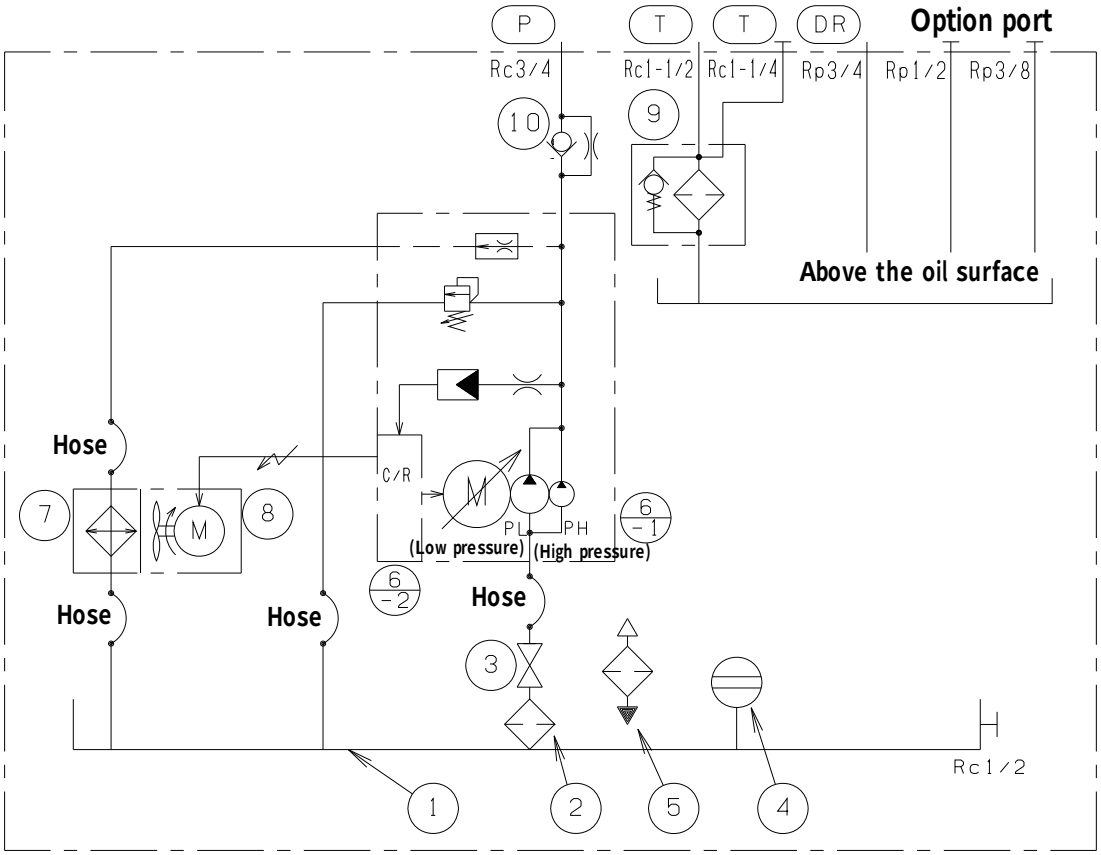

Part number	Name
1	Tank
2	Suction strainer
3	Stop valve
4	Oil level gauge
5	Oil port and air breather
6-1	Inverter-driven motor pump
6-2	Controller
7	Oil cooler
8	AC fan
9	Return filter
10	Check valve

● SUT10D8021-30, SUT16D8021-30

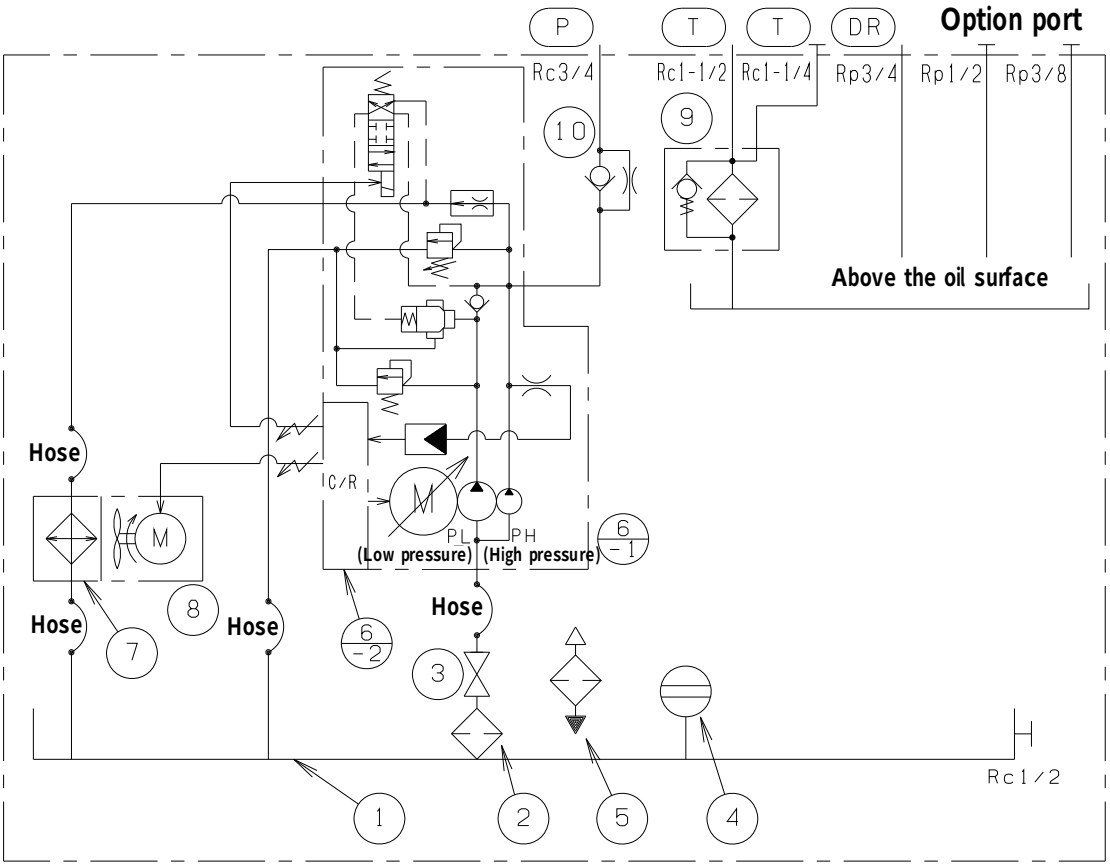

Part number	Name
1	Tank
2	Suction strainer
3	Stop valve
4	Oil level gauge
5	Oil port and air breather
6-1	Inverter-driven motor pump
6-2	Controller
7	Oil cooler
8	AC fan
9	Return filter
10	Check valve

Chapter 4 Names of Unit Components

■Motor Pump Type (SUT00)

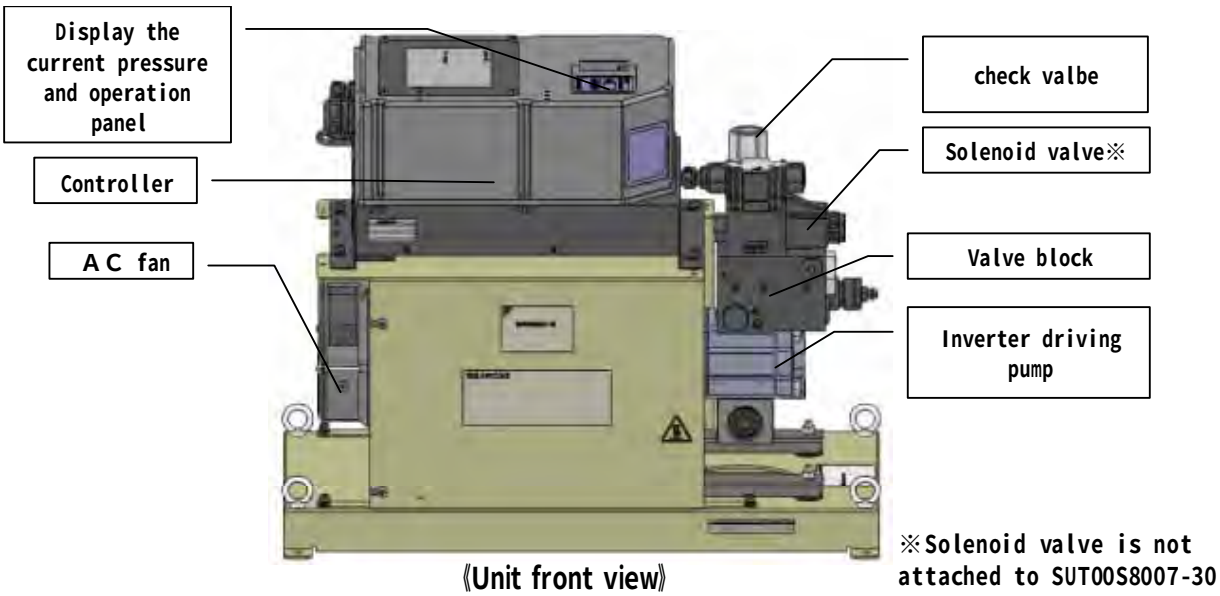

《Unit front view》

■Unit Type (SUT10, SUT16)

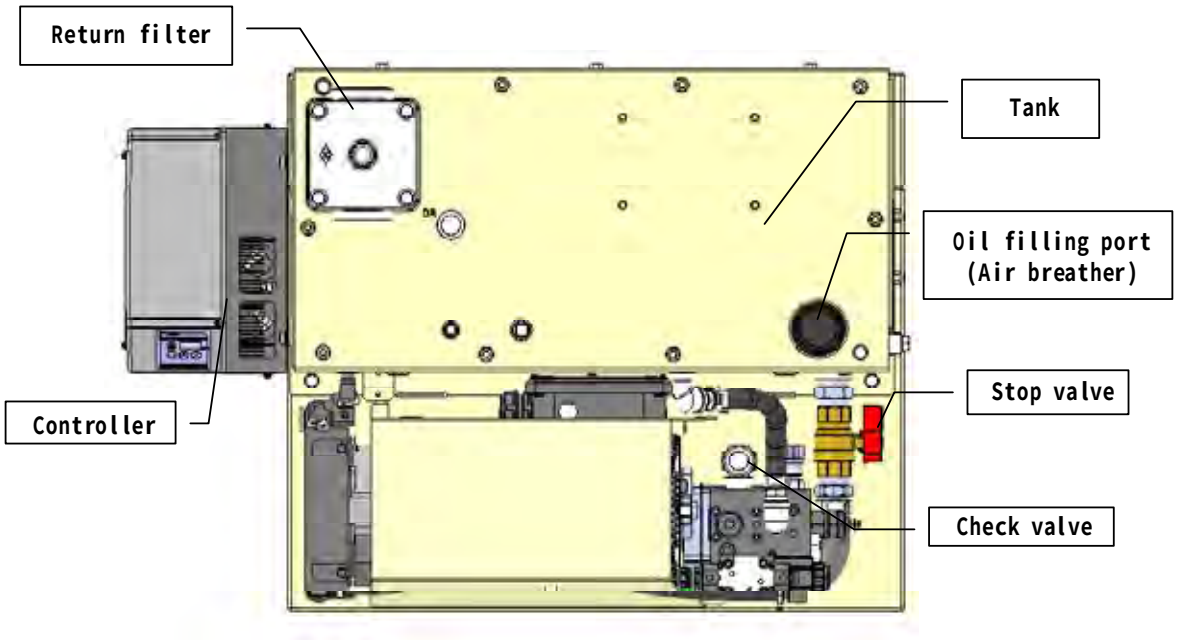

《Unit top view》

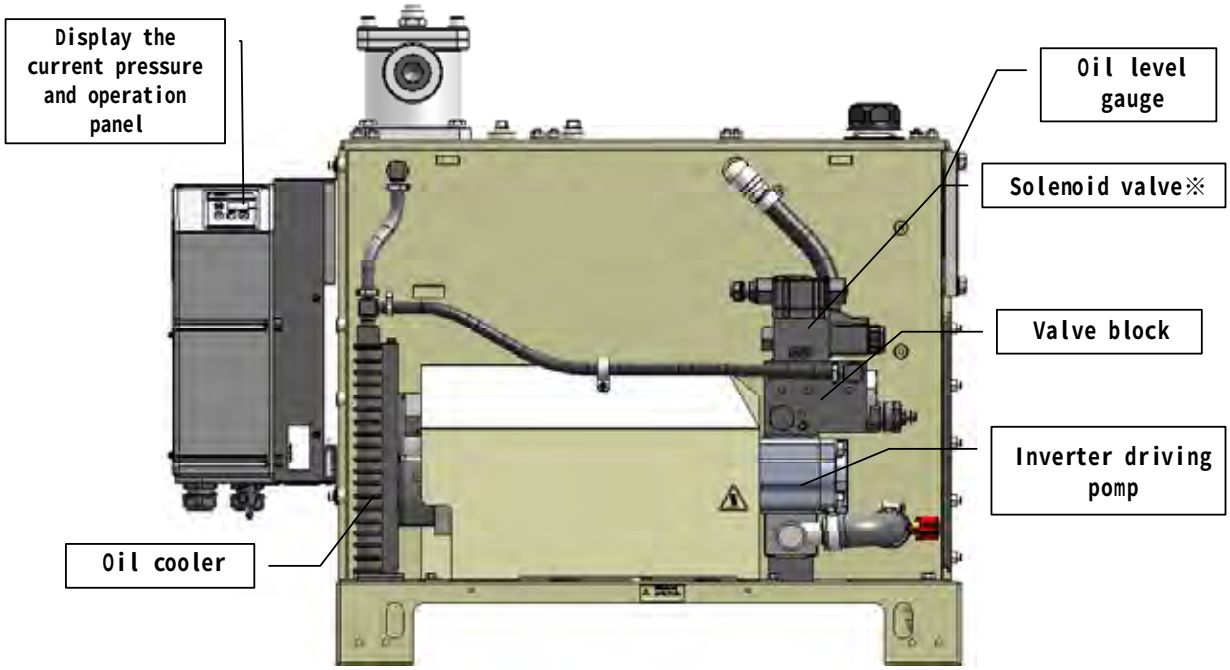

※Solenoid valve is not attached to SUT10S8007-30

《Unit front view》

Chapter 5 Start-up Procedure

Start-up Procedure are as follows.

1. Check ····· Refer to “Chapter 6 Confirmation of the Arrival Product”

2. Transportation and installation ····· Refer to “Chapter 7 Transportation and Installation”

3. Piping ····· Refer to “Chapter 8 Piping”

4. Electric wiring ····· Refer to “Chapter 9 Electric Wiring”

5. Turning on the power ····· Refer to “Chapter 10 Test Run”
   Please make sure the following items firstly and turning on the power.
   Is it already correctly installed?
   Is it already correctly plumbed?
   Is the hydraulic oil injected?
   Is it already correctly wired?
   Is the power supply voltage correct?

6. Flushing running ····· Refer to “Chapter 10 Test Run”

7. Oil replacement ····· Refer to “Chapter 10 Test Run”

8. Air vent ····· Refer to “Chapter 10 Test Run”

9. Operation check ····· Please check the operation of the actuator. Please refer to “11.5 Setup mode”, change the setting value of the pressure and flow rate

Chapter 6 Confirmation of the Arrival Product

6.1 Package Contents

⚠ CAUTION
● Please check the top and bottom of the product and unpack. There is a risk of fall.

Opening the package, and confirm whether the followings are damaged.

- One hydraulic unit
- One simplified operation manual

6.2 Form confirmation

⚠ CAUTION
● Please confirm whether the model described in the product nameplate of the motor pump and controller matches the ordered product's model. If the wrong product is used, it may cause damages.

Please confirm whether the model described in the product nameplate matches the ordered product's type. Please refer to the "3.1 Model identification code " for the type.

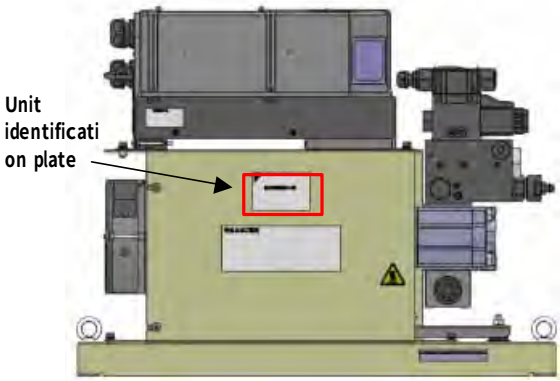

≪Motor Pump Type (SUT00) Unit front view≫

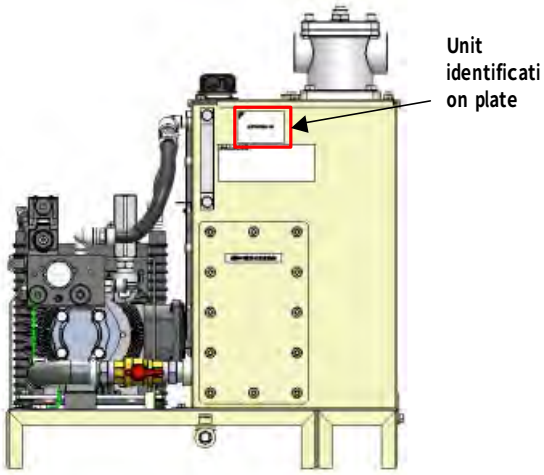

≪Unit type(SUT10,SUT16)Unit right view≫

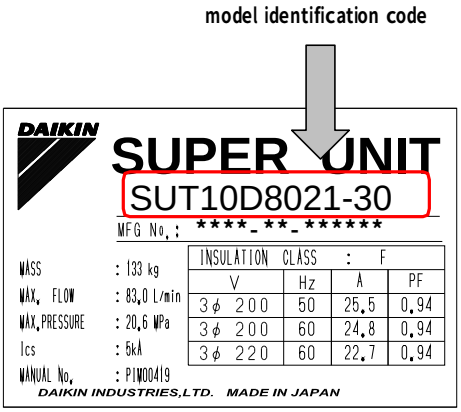

≪Unit identification plate≫

Chapter 7 Transportation and Installation

7.1 Transportation

7.1.1 Transportation under packing condition

Please use lift to haul this unit when it is under packing condition. Please refer to the illustration below for the point where you lift. The weight of the package can be found on a label affixed to the side.

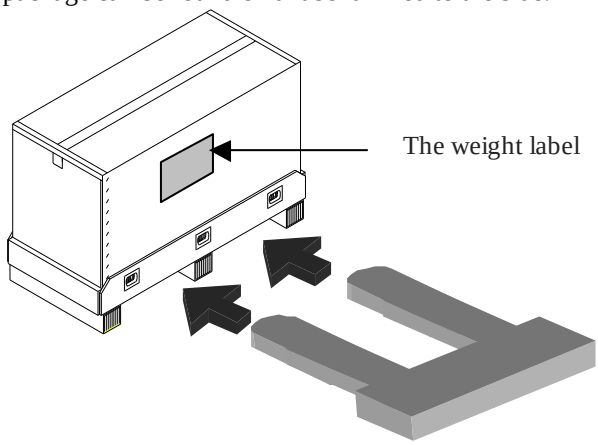

⚠ WARNING
● Please use suitable delivery device to transport this package. There is a risk of falling and collapse. ● When lift the package, please confirm the position of the gravity center and weight. There is a risk of falling and collapse.

7.1.2 Transportation of the unit

In the case of product transportation, please use eyebolt or hook hole. In addition, lift equally at 4 points. If using other place to lift, there is a risk of falling.
Please check the weight of the hydraulic unit, and make sure the sling is suitable.

■Motor pump type(SUT00)

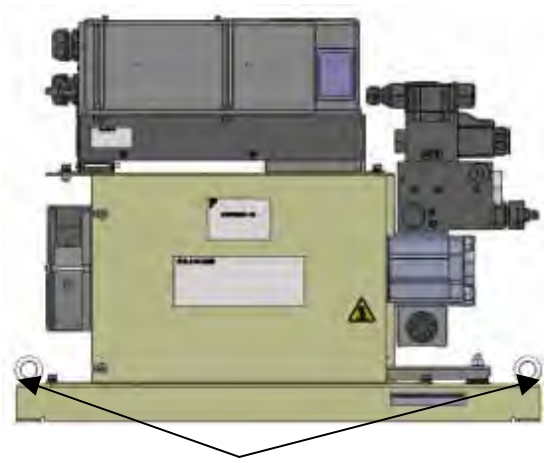

Eyebolt (at 4 point)

■Unit type(SUT10,SUT16)

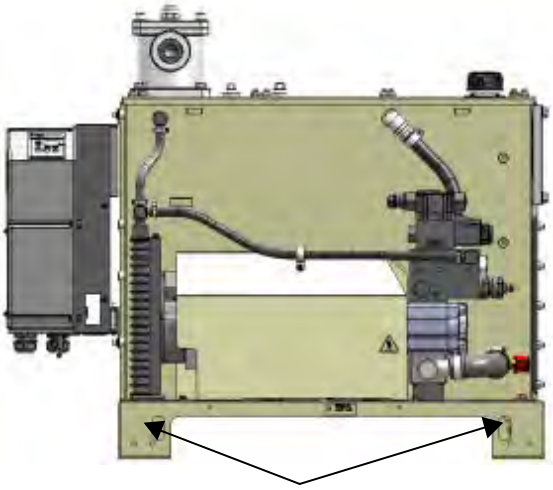

Hook slot (at 4 point)

■Products Weight

● Motor Pump Type (SUT00)

Product Type	Weight [kg]
SUT00S8007-30	72
SUT00D8021-30	72

● Unit Type (SUT10, SUT16)

Product Type	Weight [kg]
SUT10S8007-30	131
SUT10D8021-30	133
SUT16D8021-30	145

* The weight does not include the hydraulic oil.

⚠ DANGER

- If other parts (such as pump pipe) besides the long hooking hole are used to hook, there is a risk of falling or collapse.
- Check the weight of the hydraulic unit in the above table, please make sure it is under the lift rated load.

⚠ WARNING

- During the transportation, must equally hook at four points of the long hooking hole.
- During transportation by sling, please do not stay too near. There is a risk of injury due to falling.

⚠ CAUTION

- Avoid transporting the hydraulic unit with hydraulic oil contained in the tank. This may cause oil leak, or malfunction due to air intrusion.
- This product is a precision instrument. Please do not shock or drop it. It may be damaged.
- During the transportation , please do not touch the harness, piping, and solenoid valve. There is a risk of accidents caused by falling or damage.
- Fix and make sure it can not be moved by external force or vibration during the transportation.

7.2 Installation

7.2.1 Ensuring air intake/exhaust space

Install this unit at well-ventilated place without hot air, and keep space 10 cm from the unit end surface. Make sure that the intake air temperature does not exceed the specified ambient temperature range (40 °C or lower temperature).

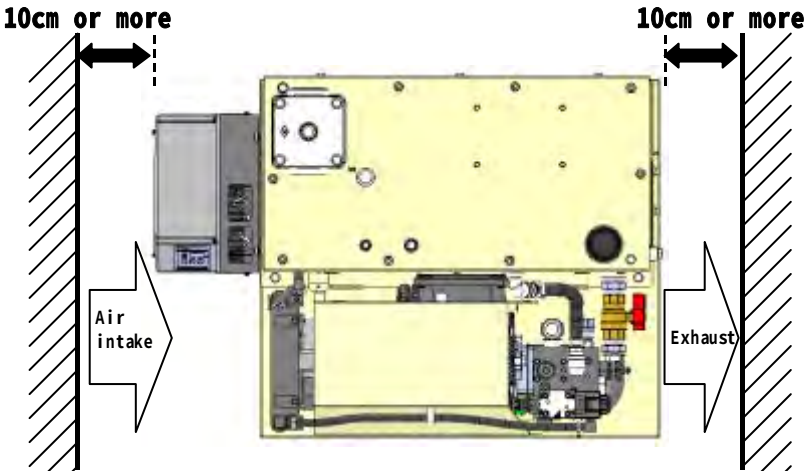

⚠ WARNING
● If the intake / exhaust space above can not be ensured, the heat exchange efficience of the oil cooler / AC fan will be reduced. There is a risk of burns because the hydraulic oil and equipment will become extremely hot. So, please keep the intake / exhaust space as shown in the figure above. ● If you accidentally touch the hot parts, you may get burns.

⚠ CAUTION
● If the intake / exhaust space above can not be ensured, the motor or controller will become hot, and the life of the equipment will be reduced significantly. Please keep the intake / exhaust space as shown in the figure above. ● If the intake / exhaust space above can not be ensured, the motor or controller will become hot, and the temperature protection function will be activated to make it shutdown. ● If you continue using it in the high temperature state, the life of other electrical components and hydraulic equipments such as valves and pumps will be reduced, and the malfuntion will occur.

7.2.2 Fixation of the unit

Please install the hydraulic unit on a level base or level floor which is not affected by vibration of the master machine.
About installing methods, and installing location, please check delivery specifications (model drawing).
During transportation, in order to prevent the anti-vibration rubber of the motor pump from being damaged, the fixing wing bolt is installed.
Please remove the fixing wing bolt in operation. If it is not removed, the unusual noise and vibration will be caused.
But during transportation, please fix the pump motor by the wing bolt for protection of the anti-vibration rubber.

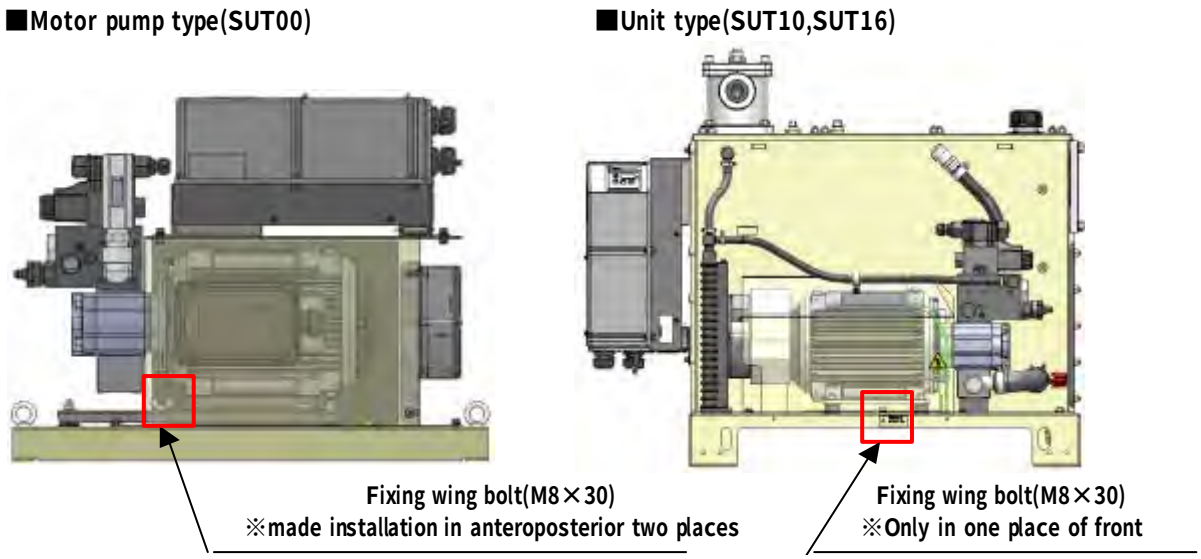

⚠ WARNING
● Unless the hydraulic unit is fastened , it may be turned over or moved by reaction force under the oil pressure in the pipe. Be sure to fasten this unit bay bolts.

⚠ CAUTION
● If the hydraulic unit is installed on an inclined plane, oil leak or air intrusion occurs, resulting in abnormal sound or shortened service life of the equipment. Be sure to install the unit on a level plane.

Chapter 8 Piping

8.1 Piping

■Motor pump type (SUT00)
There are different port types below for motor pump types. Please pipe all ports. The details of the pipe position is separately described in the model drawing. Please use hose and sealing tape to pipe.

●Motor pump type (SUT00) Port Specifications

Product type	Pipe port	Pipe size	Recommended hose pressure	Default
SUT00S8007-30 SUT00D8021-30	Discharge port	Rc 3/4	SUT00S8007-30：10.5MPa SUT00D8021-30：34.5MPa	Vinyl cap
	Drain port	Rc 3/8	1.5MPa	Resin plug
	Suction port	Rc 1	1.5MPa	Resin plug
	Unload port	Rc 1/2	1.5MPa	Vinyl cap

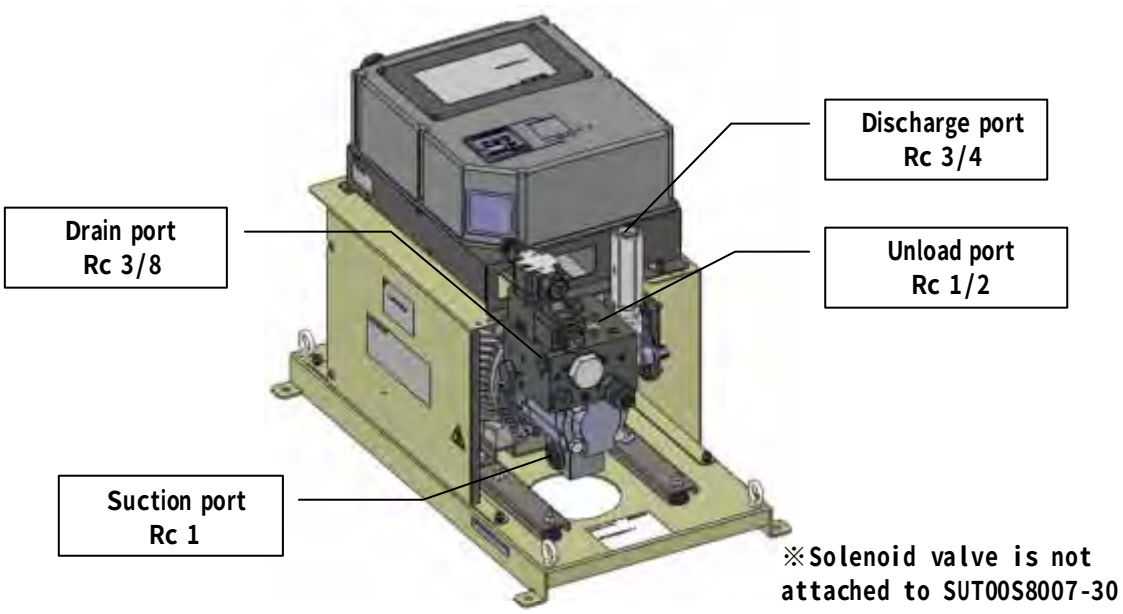

●About the filter
You must install filters in the suction side and the tank return line in this product. Please attach the suction filter of 150 mesh to the suction side, and attach the return filter of 10μm to the tank return line. (25μm or less for using under 7MPa)
Please keep the degree of hydraulic fluid contamination under NAS9 class.

●Cleanliness of the hydraulic fluid
In order to maintain the cleanliness of the hydraulic fluid, please note the following matters.
・Please ensure the distance between the suction port and the tank bottom (10cm or more).
・Please ensure the distance between the suction port and the return port. Or put a baffle plate (partition plate).
・Please install a filter (40μm or less) to the air breather.
・Please design the oil tank and make sure the waste can not enter it from the outside.

⚠ DANGER

- During piping, please make sure the bending radius of the hydraulic hose satisfy the manufacturer recommended value. As for the hose fixing method, please follow the hose manufacturer recommended method.

⚠ CAUTION

- Please make sure the suction pressure is under -0.02MPa. If it becomes more than -0.02MPa, the flow rate may reduce and the noise may become large.

■Unit Type (SUT10, SUT16)

There are different port types below for unit types. Please be sure to pipe the outlet port and return port. The details of the pipe position is separately described in the form drawing. Please use hose and sealing tape to pipe.

●Unit Type (SUT10, SUT16) Port Specifications

Product type	Pipe port	Pipe size	Recommended hose pressure	Default
SUT10S8007-30 SUT10D8021-30 SUT16D8021-30	Outlet port	Rc 3/4	SUT10S8007-30：10.5MPa SUT10D8021-30：34.5MPa SUT16D8021-30：34.5MPa	Vinyl cap
	Drain port	Rp 3/4	1.5MPa	Vinyl cap
	Option port	Rp 3/8, Rp 1/2	1.5MPa	Square head plug
	Return port	Rc 1 1/2	1.5MPa	Vinyl cap
	Return port	Rc 1 1/4	1.5MPa	Hexagon socket head plug

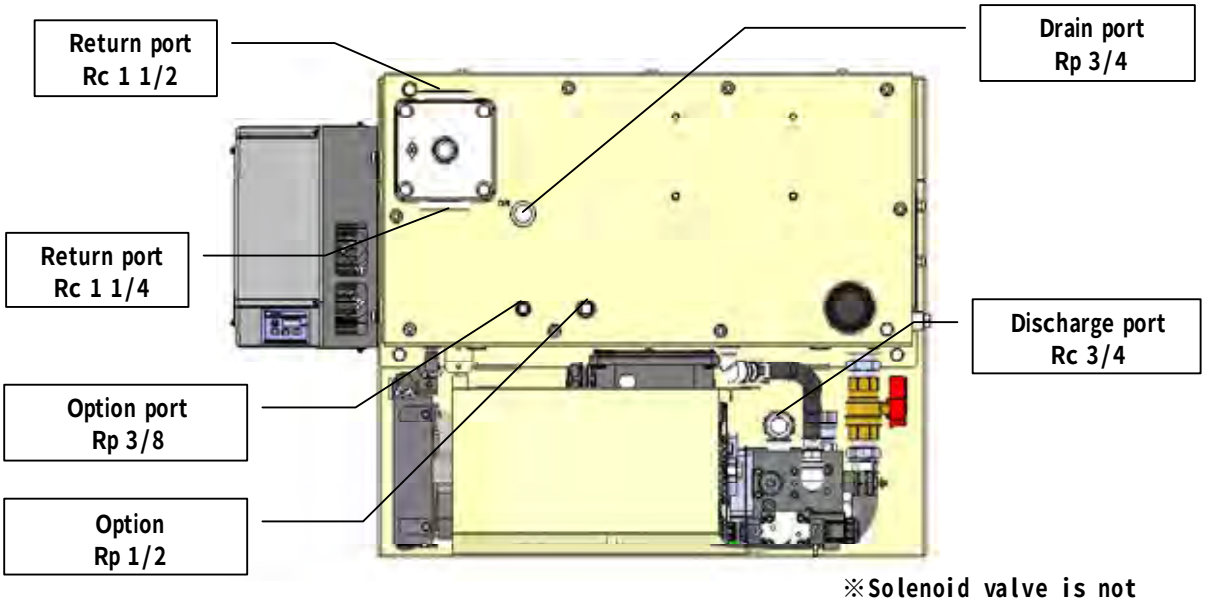

※Solenoid valve is not attached to SUT10S8007-30

⚠ CAUTION

- Please use hose to pipe.
- When piping the hose, the bending radius of the hose should be more than its specification value.
- Please do not twist the hose.
- Please support the hose if there is a excessive distortion due to the weight of the hose.

8.2 Filling hydraulic oil (Only SUT10, SUT16)

- Remove the cap of the oil filling port (air breather) by turning it counterclockwise, and fill clean hydraulic oil (pollution degree: NAS Class 9 or lower level) into the tank. Set the oil level so that the float of the level gauge is between the red and yellow lines.
- Use the hydraulic oil conforming to the specifications. Refer to "3.2.2 Common Specifications "
- Make sure that the stop valve is opened.

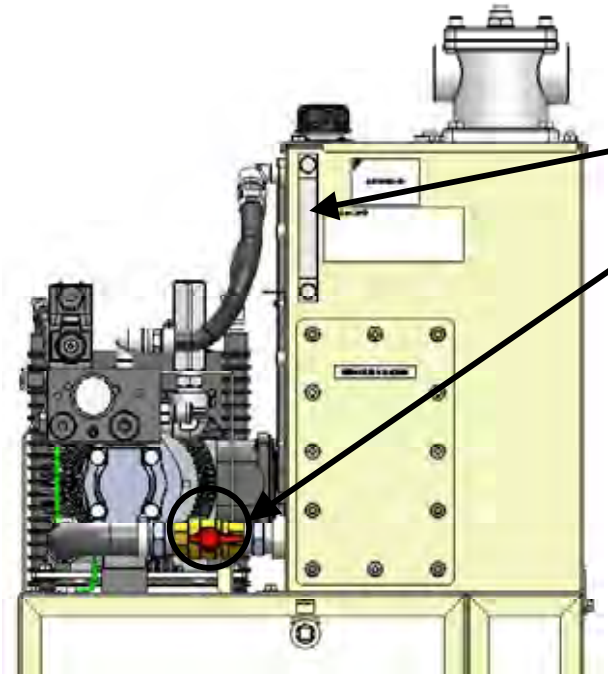

Tank capacity	Oil level setting range	
	Yellow line (upper limit)	Red line (lower limit)
100L	100L	76L
160L	164L	124L

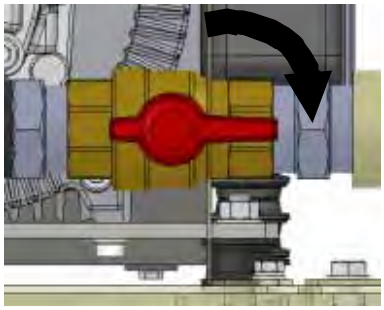

Stop valve is opend

⚠ CAUTION

- Operating the hydraulic unit with no oil in the tank or closing the stop valve causes pump seizure or wear, which may result in pump damage.
- During initial operation of the machine, oil will be supplied into the hydraulic circuit of the machine. Be careful about a decrease in oil level in the tank.
- The oil level in the tank may largely fluctuate depending on the machine hydraulic circuit. This may result in oil leak from the tank, or decrease in oil level. Please adjust the oil amount to be an optimal value while watching the oil level meter.

Chapter 9 Electric Wiring

- This hydraulic unit needs connections of main power cables and I/O signal cables as required.
- Please remove the controller cover by loosening and removing the Cross head screws M4×4, then connect the main power cables and I/O signal cables. After completing the wiring, please replace the controller cover. The recommended tightening torque is 1.0 N·m.
- Connect the main power cable and I/O signal cables through the specified wiring holes.
- In order to protect the electric circuit against short-circuiting and overcurrent and prevent electric shocks, the hydraulic unit main power supply must be equipped with a no-fuse breaker conforming to European Norm EN60947-2.
- For the power supply connection device, use a switch that provides 3 mm or longer contact distance for three electrodes in the OFF status.

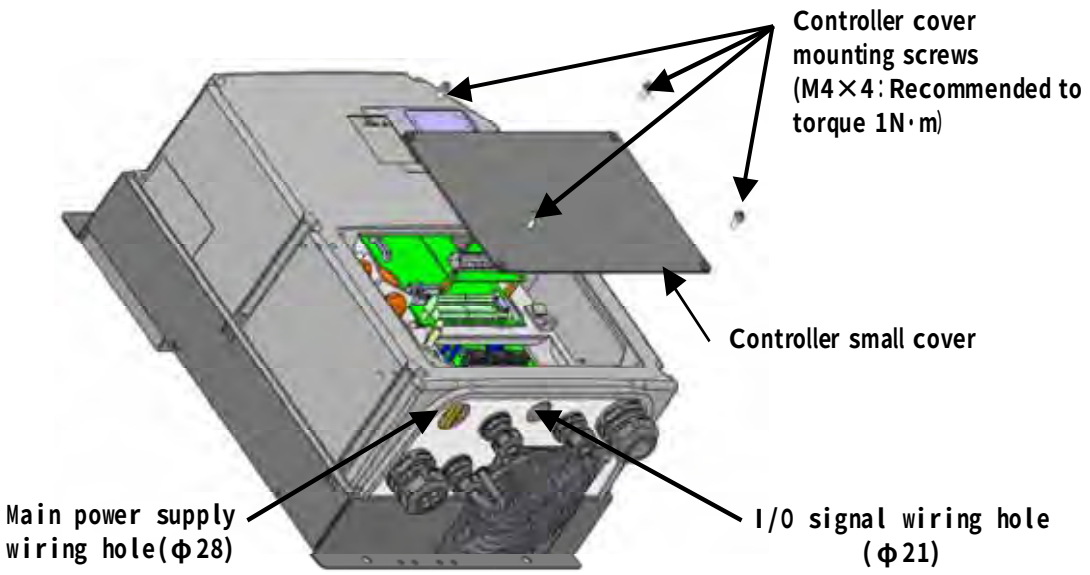

⚠ DANGER

- Please attach the no fuse breaker that conforms to the European standard EN60947-2 to the power line, in order to reduce the risk of electric shock and protect the electrical circuit against over-current or short-circuit. (Please refer to "9.2 Installation of breaker" for the capacity of each model.)
- Please connect the ground terminal by the D class grounding method (formerly Class 3 grounding). (Please directly connect, do not go through the breaker.)
- Before connecting the cables, please wait 5 minutes after turning off the main power supply. There is a risk of electrical shock.
- Do not apply an excessive power supply voltage higher than the power supply rating of the hydraulic unit. Otherwise, the controller may be damaged.
- Please do not make cables and terminals short circuit or ground fault. There is a risk of electrical shock or fire.
- When you peel the wires, please be careful not to scratch the conductor.
- Please use the cable clamp and multi-core cable for wiring, make sure the wiring satisfy the IP54 protection grade or more.

9.1 Wiring diagram

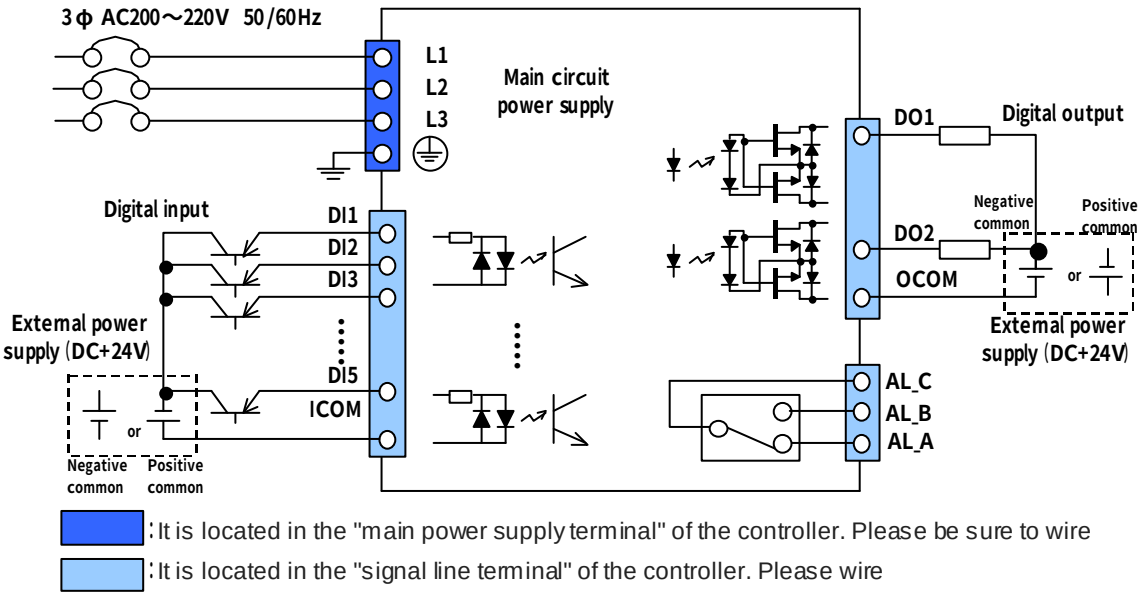

9.2 Installation of breaker

To prevent electrical accidents, please be sure to connect the no-fuse breaker that conforms to EN60947-2 to the power supply line. Breaker capacity is shown in the following table.

[Breaker setting and rated current]

Power voltage and frequency			Breaker setting value
3φ 200V50Hz	3φ 200V60Hz	3φ 220V60Hz	
25.5 A	24.8 A	22.7 A	50A

9.3 Connecting the main power supply cable

1）Please prepare power line, crimp terminal and cable clamp.
Recommended Products

Cable Specification	Cable Size	Recommended Cable	Recommended Crimp Terminals	Recommended Cable Clamp
CE	6.0mm^2 or more	CE362 6.0mm^2×4 Core（Manufactured by KURAMO ELECTRIC）	RBV5.5-4	Manufactured by OHM ELECTRIC OA-W2219 Applicable Cable Shape : Φ15～Φ19

2）Connect the main power cable through the wiring hole of controller. Please use cable clamp to the wiring port for meeting the IP54 protection degree.

3）Please connect the power line to the terminal base. Because the ground connection bis is different from the power supply line’s connection terminal, please not be confused. The recommended tightening torque is 2.4 N･m.

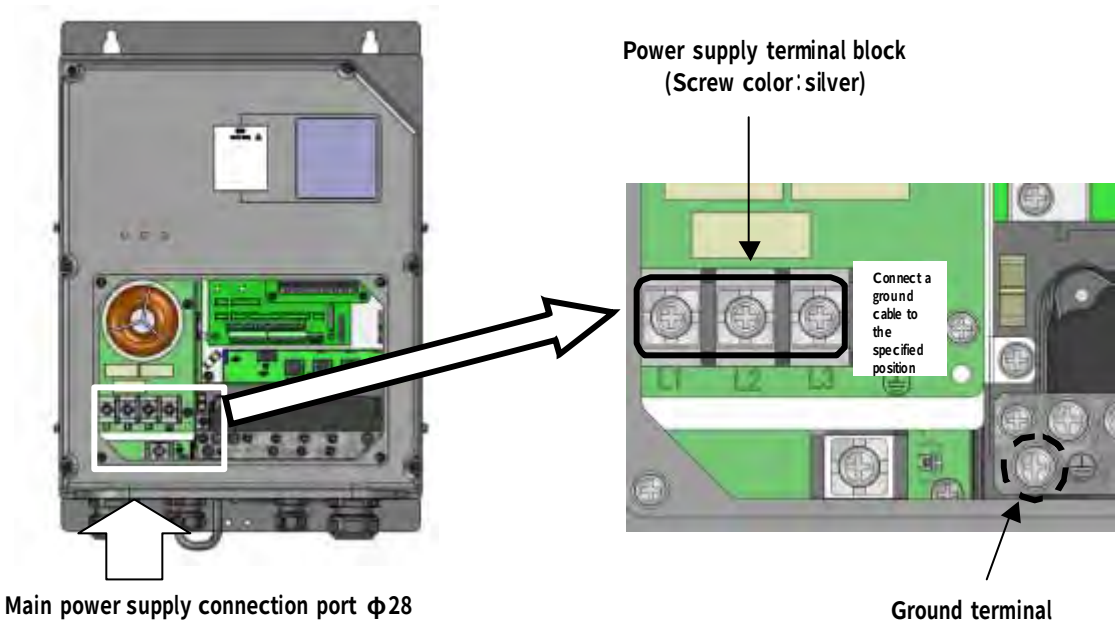

⚠ DANGER
● Please use the AC power supply which is suitable for the power specifications of this product. ● Please use cables which is suitable for the power supply capacity. ● Please use crimp terminal at the tip of cable to connect. In addition, please use the tools adapted for crimp terminals. Because of the crimping failure, there is a risk of wires falling out, short-circuit, heat generation and burning. ● Please connect the ground terminal by the D class grounding method (formerly Class 3 grounding) ● Be sure not to connect the power supply cable to the I/O signal terminals or ground terminals. There is a risk of electric shock and equipment damage.

⚠ CAUTION
● The hydraulic unit incorporates an overcurrent protection function. Therefore, it does not need an overcurrent protection thermal relay.

9.4 Connecting the I/O signal cable

1） Please prepare power line, crimp terminal and cable clamp.

Recommended Products

Cable Size	Recommended Cable	Recommended Cable Clamp
0.3 ~ 1.0mm2 (AWG16 ~ 22)	KVC-36SB 0.3 ~ 0.5mm^2 (Manufactured by KURAMO ELECTRIC)	Manufactured by OHM ELECTRIC OA-W1611 Applicable Cable Shape：Φ9 ~ Φ11

2） Connect the main power cable through the wiring hole of controller. Please use cable clamp to the wiring port for meeting the IP54 protection degree.

3） Please check the specifications of each signal line, and connect the input and output signal terminal block.

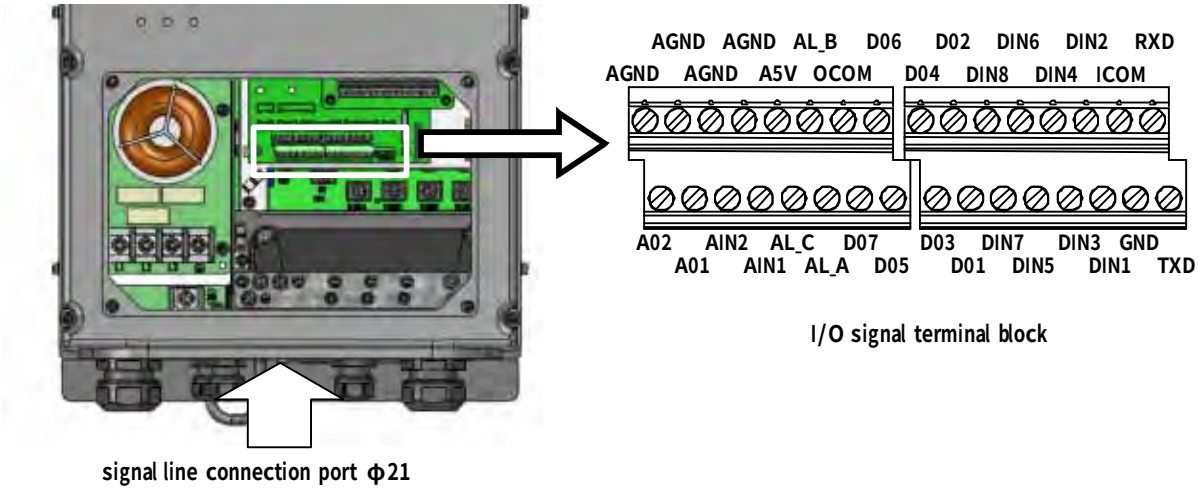

Terminal name	Signal name	Function of terminal
AL_C	Alarm output common	Please refer to 9.4.3 Contact output
AL_B	Alarm output b point	
AL_A	Alarm output a point	
OCOM	Digital output common	Please refer to 9.4.2 Digital output
DO2	Digital output 2	
DO1	Digital output 1	

Terminal name	Signal name	Function of terminal
DIN5	Digital input 5	Please refer to 9.4.1 Digital input
DIN4	Digital input 4	
DIN3	Digital input 3	
DIN2	Digital input 2	
DIN1	Digital input 1	
ICOM	Digital input common	

How to connect to the terminal base

① Loosen the screw with a screwdriver.
② Check the unsheathed length of the cable, and insert it all the way into the terminal so that the conductors will not become loose.
③ Tighten the screw with a screwdriver.
④ Pull the cable lightly to make sure that it is securely connected.

Unsheathed length of the cable: 6 mm

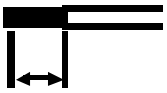

⚠ CAUTION

- Please check the specifications of each signal lines and connect.
- Terminate the shielded cable securely, and connect it to the shielded cable connection terminal.
- If noise cannot be eliminated by connecting the shielded cable to the ground terminal, the user's equipment should be directly grounded. (Disconnect the ground cable of this unit.)

9.4.1 Digital input

These terminals are used for sequence input signals that control the unit operations from external equipment.
Connect these terminals as required, with reference to the table below.

Terminal name	Signal name	Remarks
ICOM	Digital input COM	Both positive and negative signals are acceptable.
DIN1	Digital input 1	Used for start/stop control. In the default setting, when the signal turns ON it stops. With the start/stop signal switching parameter (Setting mode: [P00]), you can change the operation at signal input.

DIN2	Digital input 2	P-Q selection No. 0 to 15 can be selected depending on the combination of digital input status. Shown in the following table.
DIN3	Digital input 3	
DIN4	Digital input 4	
DIN5	Digital input 5	

Note) While the unit is stopped by digital input 1, the panel shows “STP”.
Note) Set the time between unit stop and unit start at 0.5 seconds or more.

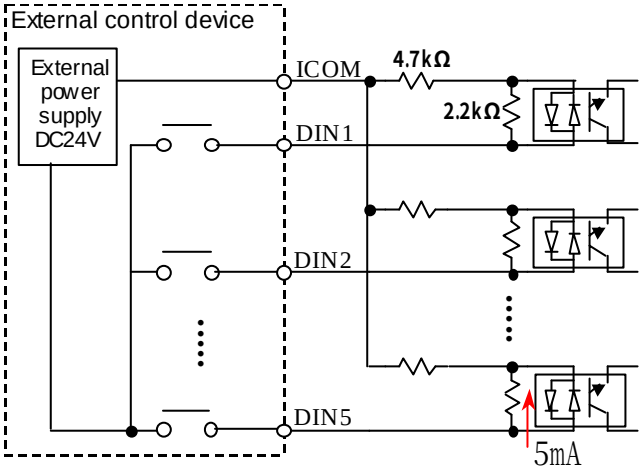

Combination of digital inputs for P-Q selection

P-Q selection No.	0	1	2	3	4	5	6	7	8	9	10	11	12	13	14	15
Digital input 2	OFF	ON	OFF	ON	OFF	ON	OFF	ON	OFF	ON	OFF	ON	OFF	ON	OFF	ON
Digital input 3	OFF	OFF	ON	ON	OFF	OFF	ON	ON	OFF	OFF	ON	ON	OFF	OFF	ON	ON
Digital input 4	OFF	OFF	OFF	OFF	ON	ON	ON	ON	OFF	OFF	OFF	OFF	ON	ON	ON	ON
Digital input 5	OFF	OFF	OFF	OFF	OFF	OFF	OFF	OFF	ON	ON	ON	ON	ON	ON	ON	ON

⚠ CAUTION

- For the external power supply, use a power supply with 24 VDC ±1 V, 0.5 A or higher capacity.
- Power cannot be supplied from this controller to external equipment.
- The current flowing through each input circuit is 5 mA (typical). To configure a circuit with a contact, be careful about the minimum current of the contact.。

9.4.2 Digital output

The alarm output single of this unit is a digital signal. Connect these terminals as required, with reference to the table below.

Terminal name	Signal name	Output content：factory setting
DO1	Digital output 1	When switching the PQ number, it becomes ON if the pressure command, flow rate command has reached the goal
DO2	Digital output 2	No output (Do not connect)
OCOM	Digital output COM	Both positive and negative signals are acceptable

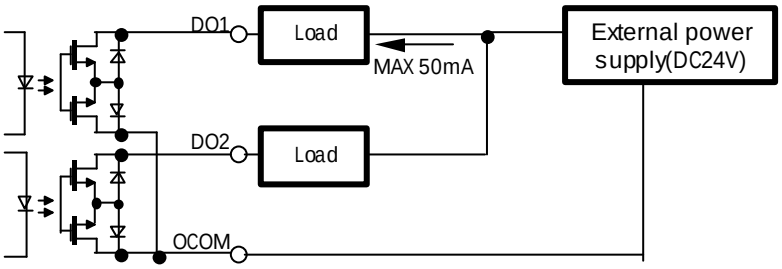

⚠ CAUTION
● As the external power supply, prepare a 24 VDC ±1 V, 0.5 A power supply. Power cannot be supplied from this controller to external equipment. ● The maximum output current of an output circuit is 50mA (resistance load). If you attempt to drive load higher than the allowable current, the circuit may be damaged. Pay attention to the maximum allowable current. ● To drive induction load, take surge preventive measures.

9.4.3 Contact output

The contact output signal for alarms. Connect these terminals as required, with reference to the table below.

Terminal name	Signal name	Output content：factory setting
AL_A	Alarm output a point	Continuity with “Common” exists when the pressure switch is normal.
AL_B	Alarm output b point	Continuity with “Common” exists when the pressure switch works or alarm occurs.
AL_C	Alarm output common	Common

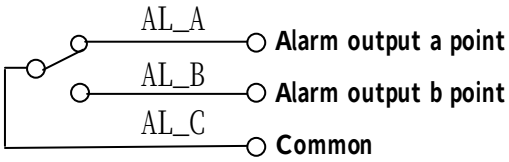

Power ON: normal

⚠ CAUTION
● The contact output switching capacity is 30 VDC/0.5 A (resistance load). If you attempt to drive load higher than the allowable current, the contact may be damaged. Pay attention to the maximum allowable current. ● The minimum allowable load of the contact output is 10 mVDC/10 μA. However, it is an approximate lower limit that enables the contact to be opened/closed under minute load. This value varies depending on switching frequency and environmental conditions. We recommend you to check the minimum allowable load in actual conditions. ● To drive induction load, take surge preventive measures.

Chapter 10 Test Run

⚠ CAUTION
● Make sure the power is able to be quickly shut off. ● If unexpected action occurs, please make sure that it is safe, then operate it.

Refer to "Chapter5 Start-up Procedure", and make sure that all preparation has been completed.

①Start check

Turn ON the switch on the machine control panel、supply the power to the unit. After power-on, it will be started in about 3 seconds.Make sure the following.

A. The display of controller operation panel is lit.
B. Confirm that the oil cooler AC fan motor is running.
C. Check the pump operation sound, and confirm that a pressure indicated on the display panel increases.

②Flushing

After completion of the start check, loop all pipes (except for the actuator), and execute flushing operation for approx. two hours while running hydraulic oil through the filter.

③Oil replacement

Drain all hydraulic oil from the tank through the oil drain port of the tank. Fill new hydraulic oil through the oil filling port (air breather) to the specified level. Check the return filter indicator. If the filter is clogged, replace the filter element.

④Air vent

Evacuate air from the hydraulic circuit completely
If air is not completely evacuated, the following phenomena may occur. An abnormal activation of actuator such as cylinder, an abnormal sound from the pumps and valves.

Chapter 11 Panel Operation

11.1 Each part name of the operation panel

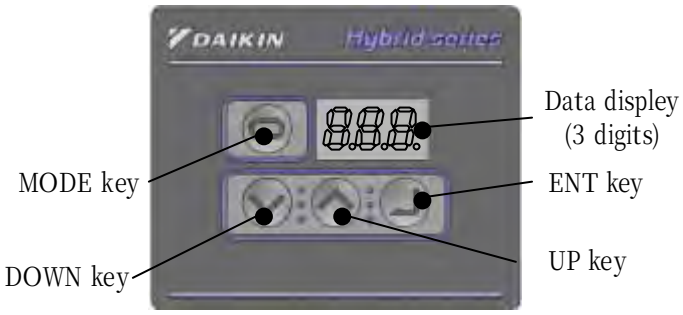

The operation panel is comprised of the 3-digit LED as shown in the left figure. There are four switch keys.
Normally, the panel shows an actual pressure value

Name			Main function
LED Display			Displaying the setting value of various functions and monitor value, such as pressure and flow rate. Displaying the current pressure in the normal mode.
MODE Key			Selecting the normal mode or monitor mode.
Setting Key	DOWN Key		Selecting the monitor data, the number of parameters. Changing the parameter setting values. Increase by the UP key, reduce by DOWN key.
	UP Key		
ENT Key			Determining the parameter number, and parameter settings.

11.2 Function of the operation panel

11.2.1 Functional overview

The following is the function of the operation panel.

Mode	Remarks
Normal mode	Display the current pressure
Monitor mode	Check the current value and the commanding voltage of pressure and flow rate.
Setting mode	Change the settings of various parameters.
Alarm mode	Check the alarm of the latest 10 times.

11.2.2 Mode switching operation

Switching among these modes as shown in figure below. Please refer to the description of each mode for details of operation.

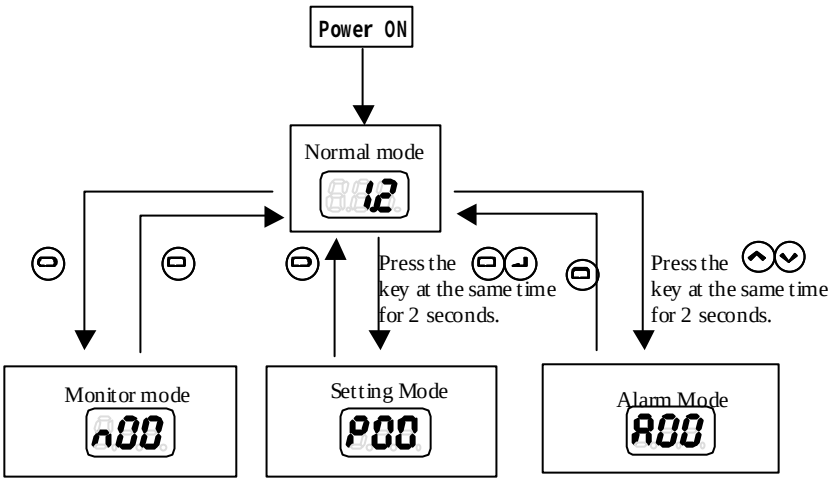

11.3 Normal mode

In normal mode, the panel display different content in different state as shown in the table below.

Status	Panel display	Remarks
Power is turned on	8.8.8.	All LED will flash momentarily when the power is turned on.
Normal	0.0	Display the current pressure in the normal status.
Stop	StP	Under the stop command, and the pressure is 0.15MPa or less.
AC fail	ACF	Flash in the AC fail status.
Alarm or warning occurs	E10	When alarm or warning occurs, display the alarm code or warning code.

11.4 Monitor mode

11.4.1 Monitor mode display item list

In monitor mode, you can monitor the items in the table below by panel operation.

Monitor number	Name	Unit	Remarks
n00	Pressure switch setting	MPa ×10PSI	Displays the pressure switch setting.
n01	Pressure setting	MPa ×10PSI	Displays the pressure settings of the current P-Q selection number.
n02	Flow rate setting	L/min	Displays the flow rate settings of the current P-Q selection number.
n03	Flow rate	L/min	Displays the current flow rate.
n04	Latest alarm code	—	Displays the latest alarm code. Press the ↵ key, you can check the number of power-on times.
n05	rpm	$\times 10 min^{-1}$	Displays the current rpm.
n06	Operating status	—	Displays the PQ selection number. "L" is a fixed sign. (Example) L-1 low pressure (confluence) PQ selection No.1
n07	Reverse rpm at power-OFF	min^{-1}	Displays a motor reverse rpm due to counter-flow from the load when the unit power supply is turned OFF. This parameter is used to estimate the machine load volume.
n08	Regenerative load integration ratio	%	Displays the load integration ratio of the current regenerative braking resistance.
n09	(Reserved for system)	—	Reserved for system
n10	Motor thermistor temperature	℃	Displays the temperature detected by the thermistor in the motor.
n11	Fin thermistor temperature	℃	Displays the temperature detected by the thermistor in the fin.
n12	Main circuit DC voltage	V	Displays the controller's internal DC voltage. The voltage value is indicated as power supply voltage multiplied by√2. The voltage value may change depending on its operating conditions.
n13	Analog input voltage 1	V	Displays the input voltage of the analog input terminal AIN1.
n14	Analog input voltage 2	V	Displays the input voltage of the analog input terminal AIN2.
n15	Analog output voltage 1	V	Displays the output voltage of the analog output terminal AO1.
n16	Analog output voltage 2	V	Displays the output voltage of the analog output terminal AO2.
n17	(Reserved for system)	—	Reserved for system
n18	(Reserved for system)	—	Reserved for system
n19	(Reserved for system)	—	Reserved for system
n20	(Reserved for system)	—	Reserved for system
n21	(Reserved for system)	—	Reserved for system
n22	(Reserved for system)	—	Reserved for system
n23	(Reserved for system)	—	Reserved for system

Monitor number	Name	Unit	Remarks
n24	(Reserved for system)	—	Reserved for system

Note1) You can check the power-ON count by pressing the key when an alarm code is displayed.

Note	If the power-ON times shown in “n04: Latest alarm code” exceeds 999 times, it will be cleared to 0.

11.4.2 Operation of the monitor mode

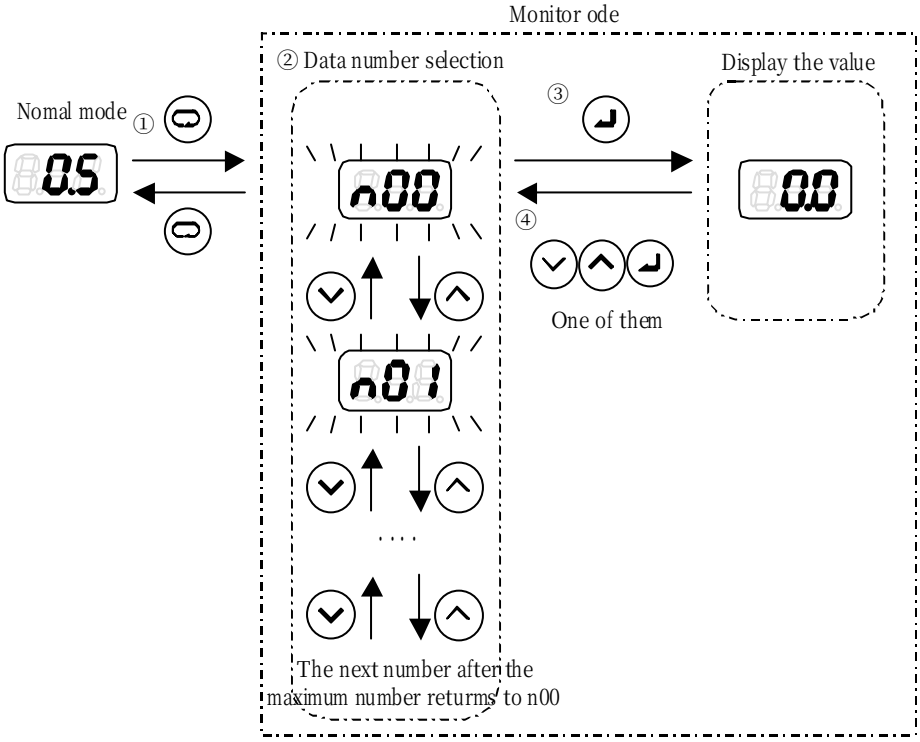

① Please press the key in normal mode to switch to Monitor mode.

② Please press the or key to select the displayed data number. Display will flash if the data number is selected.

③ Please press the key to determine the data number. The selected value will be displayed.

④ Press any key among , , to go back to the data number selection.

11.5 Setting mode

Please refer to "Chapter 12 Parameter" for setting mode parameters.

11.5.1 Operation of the setting mode

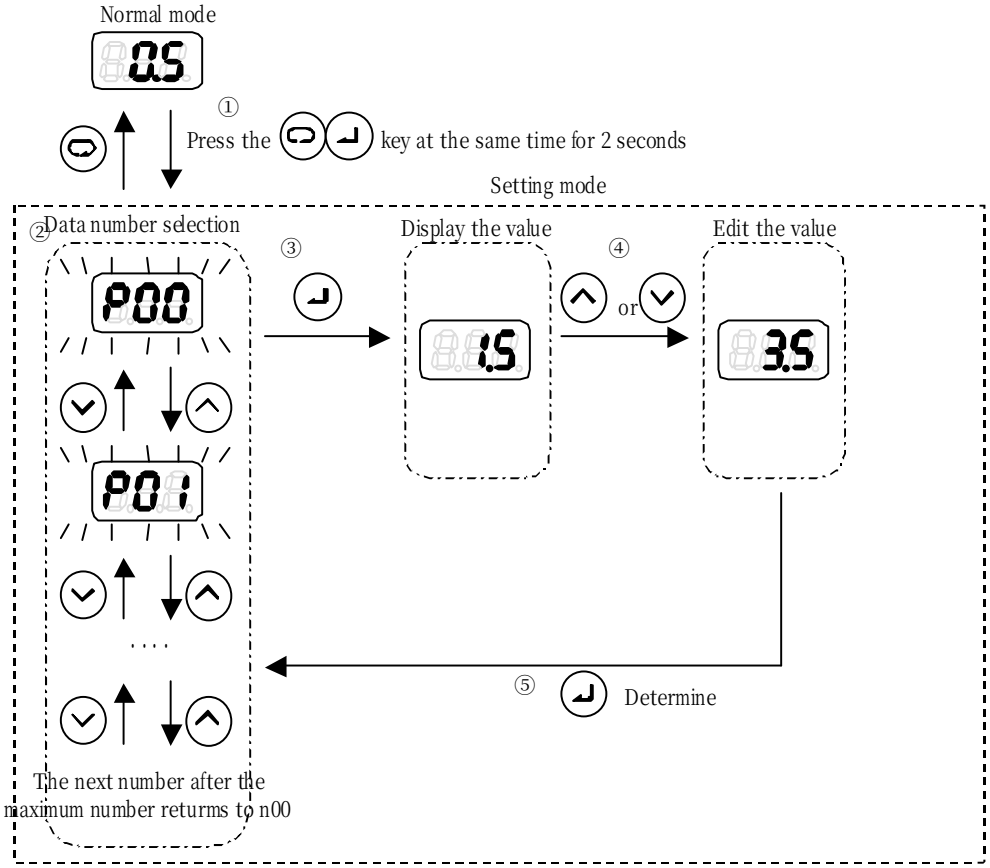

① Press the at the same time in normal mode. It will switch to setting mode after about 2 seconds.

② Please press the or key to select the displayed data number. Display will flash if the data number is under selection.

③ Please press the key to determine the data number. The selected value will be displayed.

④ Press the or key to change the setting value.

⑤ Press key to go back to the data number selection.

■PQ selection parameter

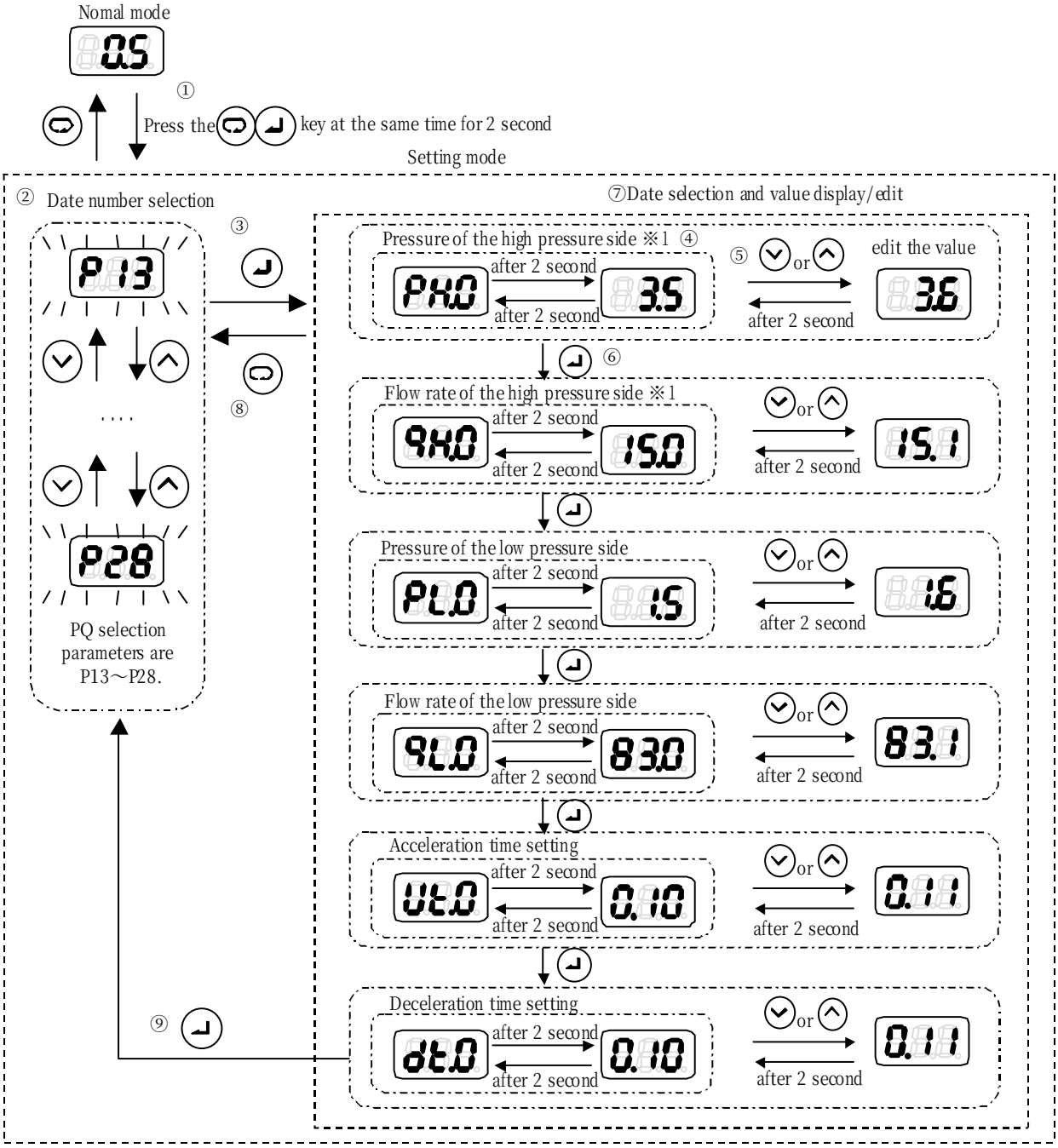

① Press the key at the same time in normal mode. It will switch to setting mode after about 2 seconds.

② Please press the or key to select the displayed data number. Display will flash if the data number is under selection.

③ Please press the key to determine the data number. The selected value will be displayed.

④ Each data symbol of PQ selection parameter and setting value are displayed alternately in about every two seconds.

⑤ Press the ⌄ or ⌃ key to change the setting value. After changing the setting value, data symbol appears about two seconds later.

⑥ Press ↵ key to to determine the data number. The next data number will be displayed.

⑦ Repeat ④, ⑤, ⑥

⑧ If press the ⟲ key, it will switch to the data number selection screen. Until then, the parameter whose value has changed holds the changed value.

⑨ If the deceleration time setting "dt. *" is setted, it will switch to the data selection screen.

Note	The parameter setting value of pressure or flow rate is limited as follows. (1) High-pressure side pressure setting value ≥ Low-pressure side pressure setting value (2) Low-pressure side flow rate setting value ≥ High-pressure side flow rate setting value When the parameter setting value of High-pressure side pressure setting, Low-pressure side pressure setting, Low-pressure side flow rate setting or High-pressure side flow rate setting changes, if its setting value reaches the above conditions, every Low-pressure side pressure setting value or High-pressure side flow rate setting value in (1) or (2) will be automatically changed as follows. (1) Low-pressure side pressure setting value = High-pressure side pressure setting value (2) High-pressure side flow rate setting value = Low-pressure side flow rate setting value

■Parameters and data display

Display Order	Display	Parameter name
1	PH.0	High-pressure side pressure setting
2	qH.0	High-pressure side flow rate setting
3	PL.0	Low-pressure side pressure setting
4	qL.0	Low-pressure side flow rate setting value
5	Ut.0	Acceleration time setting
6	dt.0	Deceleration time setting

*The first digit displays the PQ selection number. It is displayed in hexadecimal (0 ~ F).

11.6 Alarm mode

In alarm mode, you can see up to 10 alarm histories that have occurred in the past.
Please refer to "13.1.2 alarm" for the alarm code.

11.6.1 Operation of the alarm mode

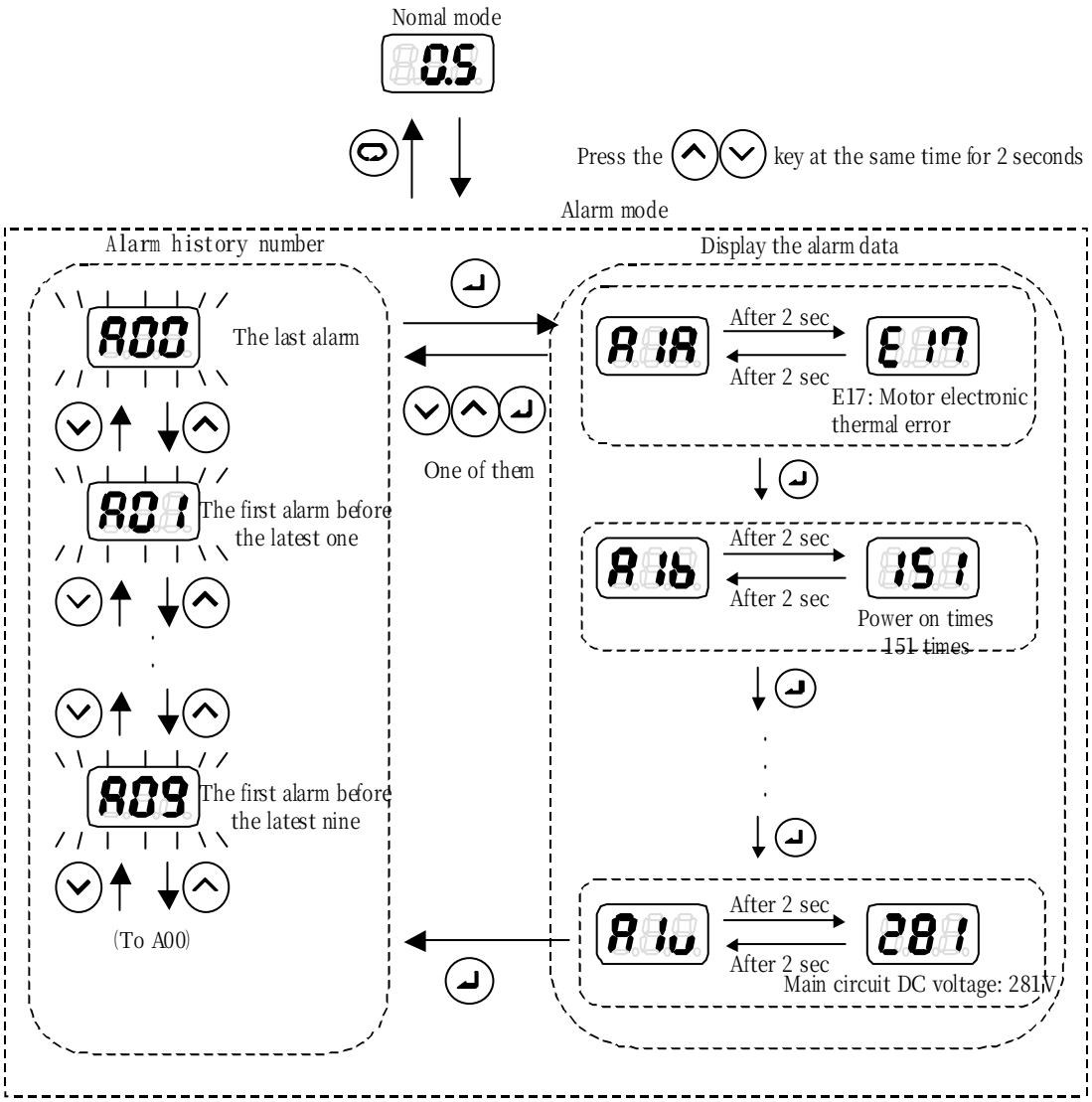

① Press the key at the same time in normal mode. It will switch to alarm mode after about 2 seconds.

② Please press the or key to select the alarm history number. Display will flash if the alarm history number is under selection. A00 is the latest alarm, in the order of the A01 → A02 →, other old alarm histories will be shown.

③ Please press the key to determine the alarm history number. The relevant alarm code and various data will be displayed alternately.

④ Press any key among ⌄ , ⌃ , ↵ to go back to the alarm history number.

No.	Panel display	Representation	Unit	Remarks
1	A*A	Alarm Content	-	Alarm Content
2	A*b	Power on times	times	The number of Power on times when an alarm occurs
3	A*S	Rotational speed	$10min^{-1}$	Motor speed at the time of alarm
4	A*n	PQ number and pump state	-	PQ number and pump state at the time of alarm occurrence. example) “L02” PQ No. 2, single pump
5	A*q	Current value	Ampere	Current when the alarm occurs
6	A*V	Main circuit DC voltage	V	Main circuit DC voltage when the alarm occurs

* is the number of 0-9, representing the alarm history.

Note	･If the power-ON times exceeds 999 times, it will be cleared to 0. ･If the value of rotation speed is minus when the alarm occurs, three dots will light up.

Chapter 12 Parameter Adjustment

12.1 Parameter List

The default value of the parameter P13 ~ 28 is different, depending on the unit type.
Please refer to Page 12-6 “Table 1: Different default parameter values for different products” for the default value of the parameter P13 ~ 28.

<table>
<tr><th>Item</th><th>Sign</th><th>Name</th><th>Operating range</th><th>Default setting</th><th>Description</th><th>Reference</th></tr>
<tr><td>P00</td><td>DI_A</td><td>Start-stop signal switch</td><td>0: Operating at DIN1-ON
1: Operating at DIN1-OFF</td><td>1</td><td>DIN1: Setting the valid logic of start-stop signal.</td><td>12-7</td></tr>
<tr><td rowspan="3">P01</td><td rowspan="3">SW_L</td><td rowspan="3">Pressure switch</td><td>0～35.0[MPa]</td><td>0</td><td rowspan="3">Setting the working pressure of the pressure switch.
Pressure switch function will be disabled, if the setting value is "0".</td><td rowspan="3">12-13</td></tr>
<tr><td>0～507[×10PSI]</td><td>0</td></tr>
<tr><td>0～350 [%]</td><td>0</td></tr>
<tr><td>P02</td><td>T_SW</td><td>Pressure switch output delay time</td><td>0.00～9.99[sec]</td><td>0</td><td>Setting the delay time, from the time the pressure decreases below “P01”to the time the pressure drop is confirmed.</td><td>12-13</td></tr>
<tr><td>P03</td><td>PSWH</td><td>Pressure switch display holding setting</td><td>0～2</td><td>0</td><td>When the warning “L63: Pressure switch operation” occures, you can keep the "L63" displaying on the operation panel. And, you can register the “L63: Pressure switch operation” in the alarm history.
<table>
<tr><th>Value</th><th>L63 display holding</th><th>Register in the alarm history</th></tr>
<tr><td>0</td><td>Do not hold</td><td>Do not register</td></tr>
<tr><td>1</td><td>hold</td><td>Do not register</td></tr>
<tr><td>2</td><td>hold</td><td>Register</td></tr>
</table></td><td>12-13</td></tr>
<tr><td>P04</td><td>DS_P</td><td>Pressure unit select setting *</td><td>0: MPa
1: PSI</td><td>0</td><td>You can switch the pressure unit displaying in the panel.</td><td>—</td></tr>
<tr><td>P05</td><td>K_RT</td><td>Load command rate at the time of regeneration</td><td>30～100[%]</td><td>50</td><td>Please adjust it, if " E14: Regenerative braking overload " occurs.
If you decrease the value, the regeneration load rate will decrease, but the deceleration time will become longer.</td><td>—</td></tr>
<tr><td>P06</td><td>D_RT</td><td>Regenerative load ratio command at the time of deceleration</td><td>0～100[%]</td><td>30</td><td>When you want to change the PQ selection, if the deceleration is more than 50% of the maximum flow, please set the deceleration torque.
If this value decreases, the regenerative load ratio will decrease, but the deceleration time will be longer.
If the default setting is 0, this function will be disabled. At this time, it’s not necessary to change the setting.</td><td>—</td></tr>
</table>

<table>
<tr><th>Item</th><th>Sign</th><th>Name</th><th>Operating range</th><th>Default setting</th><th>Description</th><th>Reference</th></tr>
<tr><td>P07</td><td>WN_M</td><td>Warning output level setting</td><td>0～2</td><td>0</td><td>Set the output signal at the time of warning occurrence.
Please refer to " P08: Alarm output mix " for more information.</td><td>12-11</td></tr>
<tr><td>P08</td><td>AMIX</td><td>Alarm output mix</td><td>0: Individual output
1: Integrated output
2: Pressure switch function expansion</td><td>1</td><td>Select the output method and output terminal of the alarm signal, pressure switch signal and warning signal,
<table>
<tr><th>P08</th><th>P07</th><th>DO2</th><th>Contact output</th></tr>
<tr><td rowspan="3">0 or 2</td><td>0</td><td>ON: Normal
OFF: Alarm</td><td rowspan="3">Pressure switch</td></tr>
<tr><td>1</td><td>ON: Normal
OFF: Alarm
ON⇔OFF: Warning</td></tr>
<tr><td>2</td><td>ON: Normal
OFF: Alarm or Warning</td></tr>
<tr><td rowspan="2">1</td><td>0</td><td rowspan="2">No output</td><td>Alarm or Pressure switch</td></tr>
<tr><td>1</td><td>Alarm or Pressure switch
or warning</td></tr>
</table>
The working pressure of the pressure switch, which is set in: "P01: Pressure switch" can be selected as follows.
<table>
<tr><th>P08</th><th>Working pressure of "P01: Pressure switch"</th><th>Unit</th></tr>
<tr><td>0 or 1</td><td>Fixed value</td><td>[MPa]</td></tr>
<tr><td>2</td><td>The ratio of the pressure setting of each PQ number</td><td>[%]</td></tr>
</table>
*If you want to change the settings of "P01: Pressure switch", it will be enabled by turning on the power again.</td><td>12-11</td></tr>
<tr><td>P09</td><td>INIF</td><td>Return to default setting</td><td>0: Invalid
1: Initialize P00 ~ P09
2: Initialize all parameters</td><td>0</td><td>Set "1", or "2" and restore the power again, the parameters will be initialized to the factory setting value.</td><td>—</td></tr>
<tr><td>P10</td><td>H_TI</td><td>Response gain</td><td>5～999</td><td>30</td><td>Set the integration gain.
The smaller the value is, the faster the response will be. And the surge pressure is more likely to occur.</td><td>—</td></tr>
<tr><td>P11</td><td>M_VR</td><td>Acceleration response gain</td><td>0～500</td><td>200</td><td>In order to improve the responsiveness, only adjust this parameter settings to increase the proportional gain, during acceleration.
The larger the setting value is, the shorter the acceleration time becomes. But the</td><td>—</td></tr>
</table>

Item	Sign	Name	Operating range	Default setting	Description	Reference
					surge pressure is more likely to occur. In addition, if set to 0, the acceleration response gain will become the maximum that is defined by the controller. And the acceleration time will become the minimum.	
P12	W_TM	Solenoid valve response delay time	0.00～9.99[sec]	0	After switching the PQ pattern, it will change the pressure command or the flow rate command after a delay determined by this parameter. Please adjust it, if you want to change pressure or flow rate, and avoid the instability in switching solenoid valve.	12-16
P13～P28	PQ selection number 0 ~ 15					
	PL.0～PL.F	Low-pressure side pressure setting	MPa ×10PSI	Please refer to 12-6 Table 1	Setting the target pressure.	12-8
	qL.0～qL.F	Low-pressure side flow rate setting	L/min		Setting the target flow rate (theoretical). Make sure the setting value does not exceed the low pressure side flow setting.	
	PL.0～PL.F	Low-pressure side pressure setting	MPa ×10PSI		Set the target pressure of the low-pressure side (pump confluence). The setting value is limited, so as not to exceed the high pressure side pressure setting. By setting this parameter to "0", high-pressure small-capacity operation can be selected. Please refer to: "12.3.3 [P40: PL_D] Settings when operating only at high pressure side (single) " for more information.	
	qL.0～qL.F	Low-pressure side flow rate setting	L/min		Set the target flow rate (theoretical value) of the low-pressure side (pump confluence)	
	Ut.0～Ut.F	Acceleration time setting	0.01～99.99 [sec/MPa] [sec/1000min^{-1}]		Setting the change time, when the pressure command or flow rate command is increased at the time of switching the PQ pattern. ・ Pressure command: Increase 1MPa time. ・ Flow rate command: Increase 1000min-1 time.	
	dt.0～dt.F	Deceleration time setting	0.01～99.99 [sec/MPa] [sec/1000min^{-1}]		Setting the change time, when the pressure command or flow rate command is decreased at the time of switching the PQ pattern. ・ Pressure command: Decrease 1MPa time. ・ Flow rate command: Decrease 1000min-1 time.	
P29	C_TM	High/Low switching response time	0.05～1.00[sec]	0.3	The waiting time between the next switching and the last switching.of pump. Because of the pressure and flow rate changing after pump swiching, the pump switching may occur frequently. Set this	—

Item	Sign	Name	Operating range	Default setting	Description	Reference
					parameter to avoid the unstable state.	
P30	DF_N	Single switching rotation dead zone	0～999[min-1]	400	Set the conditions of the motor speed when switching to single mode from confluence. When the confluence flow rate drops from the parameter ”high-pressure side flow rate setting” over this parameter, the pump will change to single mode. If the pump switches between confluence and single mode frequently, please set a large value to avoid the unstable state.	—
P31	P_SN	Pressure sensor ratings	1～35[MPa]	35	Setting the rated pressure of the pressure sensor. Usually it is not necessary to change the settings.	—
P32	S_TM	Surge less start-up time	0.01～9.99[sec]	0.5	Setting the start-up time from the motor stop to start-up. Increasing the value can prevent the rising surge. But the response time of start-up will be longer.	12-16
P33	L_IN	Motor start initial response gain	1～999	10	Setting the output of the motor at the time of start-up. Decreasing the value can prevent the rising surge. But the response time of start-up will be longer.	12-16
P34	E_TM	Motor start-up abnormality judgment time	0.01～9.99[sec]	2	Setting the judgment time of the alarm “E31: Motor start-up abnormality”.	—
P35	DR_L	Dry running judgment pressure	0.00～2.00[MPa]	0.5	Setting the pressure conditions to determine the alarm “E64: Dry running abnormality”.	—
			0～290[PSI]	7.2		
P36	DR_T	Dry running judgment time	0.01～9.99[sec]	3	Setting the time of determining the alarm “E64: Dry running abnormality”.	—
P37	SM_R	Same pressure confluence rate	0～100[%]	80	Set the switching pressure from confluence to single mode, by the ratio to the parameter “low-pressure side pressure set”. If the pressure decreases over this setting value, pump will switch to confluence mode. Only when the difference between tow parameters "low-pressure side pressure set" and "high-pressure side pressure setting" is 0.5 [MPa] or less, this parameter will be enabled. If the pump switches between confluence and single mode frequently, please set a small value to avoid the unstable state.	—
P38	P_DF	Pressure switch output dead zone	0.00～1.00[MPa]	0.5	Setting the pressure threshold value for determining the pressure return, after the pressure switch being actuated. Setting by the difference of the positive direction for:" P01: pressure switch".	12-13
			0～145[×10 PSI]	7.2		

Item	Sign	Name	Operating range	Default setting	Description	Reference
P39	DO_S	Digital output selection	0～7	0	Setting the function of the signal to be output from the digital output DO1. 0: PQ number switching completion output 1: Motor running output 2: High-pressure side operation output 3: Temperature rise during operation 4: Pressure and flow rate coincidence output 5: Pressure coincidence output 6: Flow rate coincidence output 7: Fully charged	12-11
P40	PL_D	Pump operation selection	0: Disabled 1: High pressure small capacity operation selection allowed	0	Allow the operation selection only in small capacity high pressure operation state. When this parameter is set to "0", the parameter "low-pressure side pressure setting" can be set to "1". By setting the parameter "low-pressure side pressure setting" to "0", high-pressure small-capacity operation is selected. Turn On the power again, the setting of this parameter is enabled.	—
P41	PCMW	Pressure coincidence detection range	0～99 [%]	5	Setting the pressure coincidence detection range. When the "P39: Digital output selection" is "4,5", it will be valid.	12-11
P42	PCMM	The minimum value of pressure coincidence detection	0～99.9 [MPa]	0.1	Setting the minimum pressure of the pressure coincidence detection. When the "P39: Digital output selection" is "4,5", it will be valid.	12-11
P43	QCMW	Flow rate coincidence detection range	0～99 [%]	5	Setting the flow rate coincidence detection range. When the "P39: Digital output selection" is "4,6", it will be valid.	12-11
P44	QCMM	The minimum value of flow rate coincidence detection	0～99.9 [L/min]	0.2	Setting the the minimum value of flow rate coincidence detection. When the "P39: Digital output selection" is "4,6", it will be valid.	12-11
P45	AC_F	AC fan motor synchronization	0: Always operation 1: Synchronized operation	0	DIN1: It can start / stop the AC fan in synchronization with the start / stop signal.	12-17

Please confirm the corresponding column in the "■■■■■" in SUT●●■■■■■-30 for the mode code of your product.

■Table 1: PQ setting list

Name			Product Type（SUT●●■■■■■-30）	
			S8007	D8021
High-pressure side pressure setting	The default value	[MPa]		3.5
	Range			1.5～20.6
	The default value	[×10PSI]		51
	Range			22～298
Low-pressure side pressure setting	The default value	[MPa]	1.5	1.5
	Range		1.5～7.0	1.5～7.0
	The default value	[×10PSI]	22	51
	Range		22～101	22～101
High-pressure side flow rate setting	The default value	[L/min]		15.0
	Range			4.0～30.0
Low-pressure side flow rate setting	The default value	[L/min]	83.0	
	Range		11.6～83.0	
Acceleration time setting	The default value	[sec/MPa] [sec/1000min^{-1}]	0.1	
	Range		0.01～99.99	
Deceleration time setting	The default value	[sec/MPa] [sec/1000min^{-1}]	0.1	
	Range		0.01～99.99	

⚠ CAUTION
The standard factory setting of "P04: Pressure unit select setting" is MPa. When it was changed to PSI display, please adhere a seal to make it understand easy. Please prepare the display seal. However, If it is used in Japan, you will be punished by the Measurement Law.

12.2 [P00: DI_A] Valid logic switch of the start-stop signal

You can make the motor start / stop by the input signal of the digital input terminal DIN1.
This parameter allows you to switch the effective logic of the digital input terminal DIN1.

No.	Sign	Name	Setting Range	Factory Settings	Unit
P00	DI_A	Start-stop signal switch	0: Pump starts to run when the DIN1 is ON 1: Pump starts to run when the DIN1 is OFF	1	-

Settings	DIN1 Terminal State	
	OFF	ON
0	Pump stop	Pump start
1	Pump start	Pump stop

⚠ CAUTION
Frequently turning ON / OFF the power supply may damage the controller. Please turn ON / OFF the pump by the digital input terminal DIN1 except in an emergency.

Note	If it is used without a start-stop signal, by setting the value as "1", the hydraulic unit will start automatically at power-on.

12.3 Pressure / flow rate property and PQ selection

12.3.1 PQ selection parameter

You can set several parameters in every PQ selection number, such as, maximum pressure, maximum flow rate, acceleration and deceleration time of pressure / flow rate at the time of switching PQ number.

Display	Sign *	Parameter Name	Unit
"P13: PQ selection 0" ～ "P28: PQ selection 15"	PH*	High-pressure side pressure setting	MPa
	QH*	High-pressure side flow rate setting	L/min
	PL*	Low-pressure side pressure setting	MPa
	QL*	Low-pressure side flow rate setting	L/min
	UT*	Acceleration time setting	sec/MPa sec/1000min^{-1}
	DT*	Deceleration time setting	

* : The PQ selection number (hexadecimal) is displayed in the *.

Note	The parameter setting value of pressure or flow rate is limited as follows. (1) High-pressure side pressure setting value ≥ Low-pressure side pressure setting value (2) Low-pressure side flow rate setting value ≥ High-pressure side flow rate setting value When the parameter setting value of High-pressure side pressure setting, Low-pressure side pressure setting, Low-pressure side flow rate setting or High-pressure side flow rate setting changes, if its setting value reaches the above conditions, every Low-pressure side pressure setting value or High-pressure side flow rate setting value in (1) or (2) will be automatically changed as follows. (1) Low-pressure side pressure setting value = High-pressure side pressure setting value (2) High-pressure side flow rate setting value = Low-pressure side flow rate setting value

Pressure and flow rate characteristic curve can be set by the parameter as shown in the figure below.

◆Autonomous suitching operation

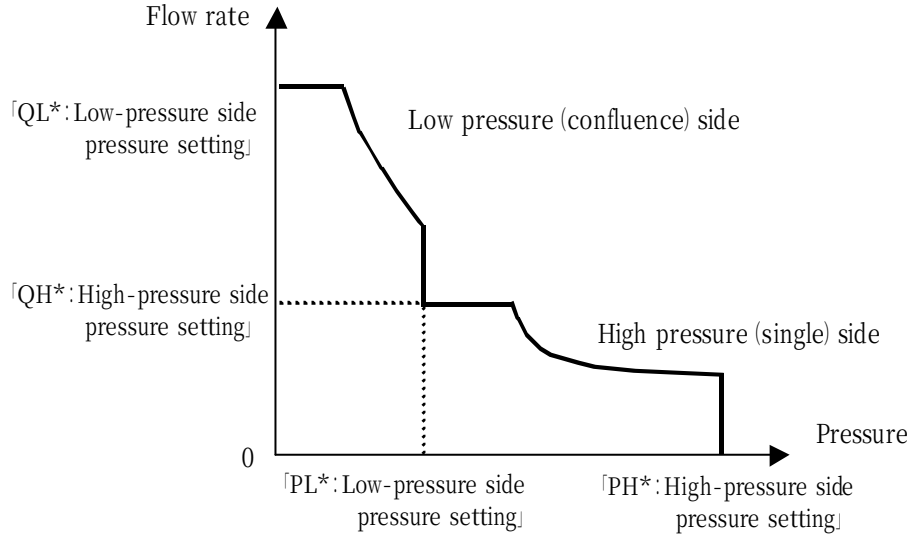

◆High-pressure and low-capacity operation

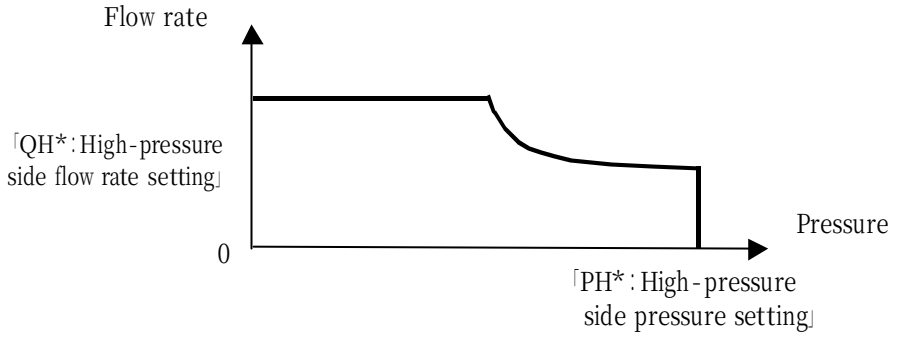

* Please refer to "12.3.3 [P40: PL_D] Settings when operating only at high pressure side (single) " for more information about how to set the high-pressure and low-capacity operation.

12.3.2 PQ selection

The PQ number can be selected by switching the digital input signal. The pressure command, the flow rate command which is set by the parameter in advance can be switched.
In addition, the acceleration or deceleration time of pressure / flow rate at the time of switching PQ number also can be changed.
By combining DIN2 ~ DIN5, the pressure and flow rate command value can be selected, as shown in the following table.

■ Select the PQ selection number by digital input signal

PQ selection number	The parameters of the selected pressure and flow command	Digital input signal			
		DIN2	DIN3	DIN4	DIN5
		Bit0	Bit1	Bit2	Bit3
0	P13	OFF	OFF	OFF	OFF
1	P14	ON	OFF	OFF	OFF
2	P15	OFF	ON	OFF	OFF
3	P16	ON	ON	OFF	OFF
4	P17	OFF	OFF	ON	OFF
5	P18	ON	OFF	ON	OFF
6	P19	OFF	ON	ON	OFF
7	P20	ON	ON	ON	OFF
8	P21	OFF	OFF	OFF	ON
9	P22	ON	OFF	OFF	ON
10	P23	OFF	ON	OFF	ON
11	P24	ON	ON	OFF	ON
12	P25	OFF	OFF	ON	ON
13	P26	ON	OFF	ON	ON
14	P27	OFF	ON	ON	ON
15	P28	ON	ON	ON	ON

◆Example of the PQ selection switching (Three-stage pressure)

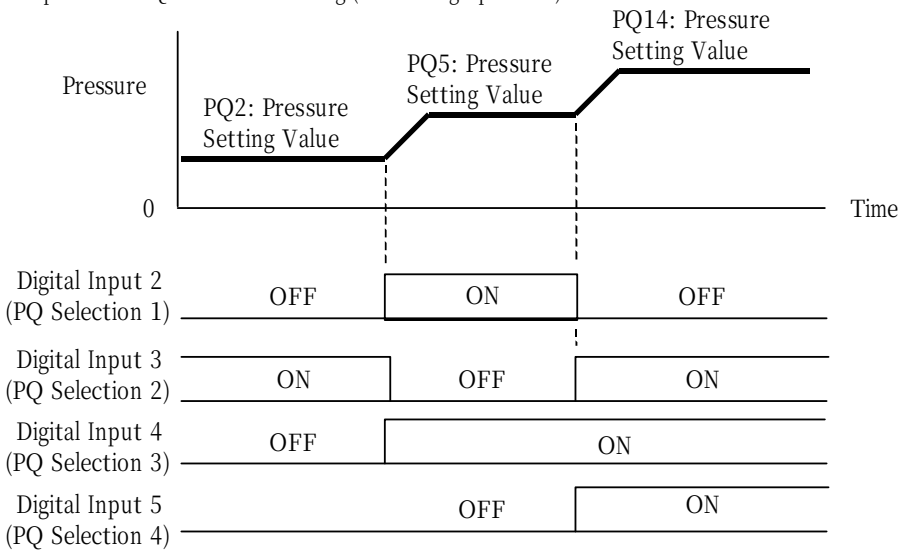

◆Pressure and flow rate change time when the PQ selection switches

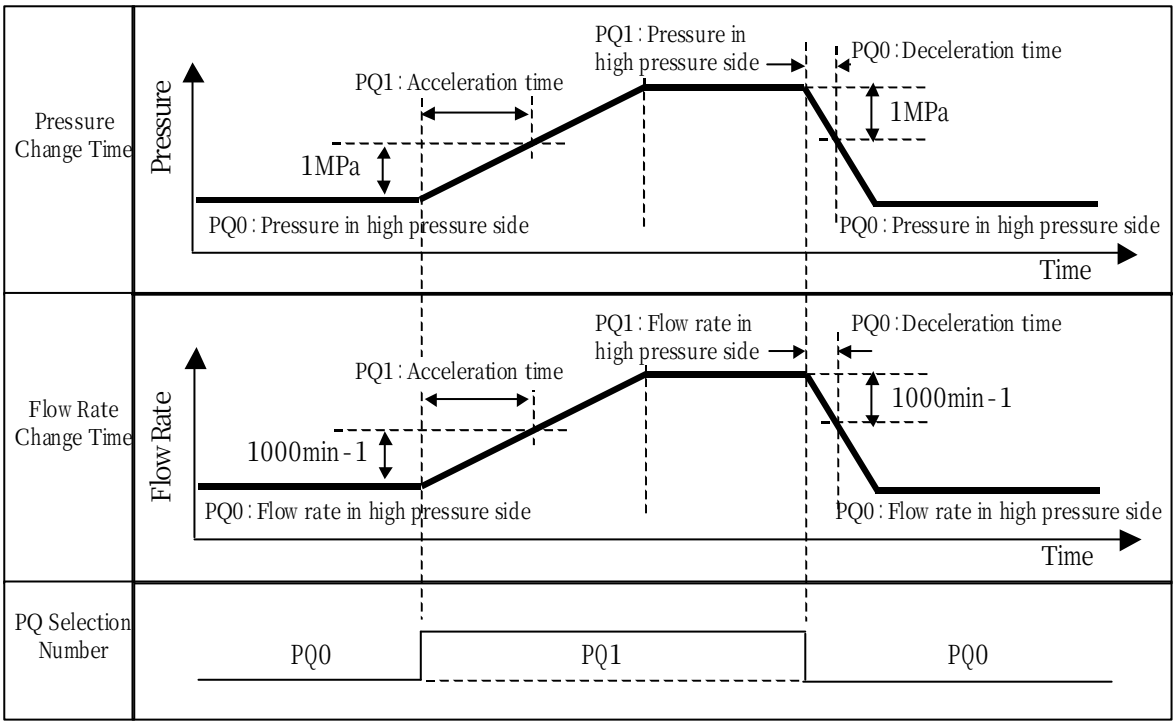

12.3.3 [P40: PL_D] Settings when operating only at high pressure side (single)

If this parameter is set to "1: high pressure small capacity operation selection allowance", the lower limit of the pressure setting of the low-pressure side will be 0.

Display	Sign	Parameter Name	Range	Factory Default Setting	Unit
P40	PL_D	Pump operation selection	0: Disabled 1: High pressure small capacity operation selection allowed	0	-

Note	The setting of this parameter will be enabled by turning on the power again.

12.4 Output signal Setting

The digital output, and the signal type can be selected by parameters, as shown in the table below.

12.4.1 Parameter

■Parameters for output signal

Display	Sign	Parameter Name	Range	Factory Default Setting	Unit
P07	WN_M	Warning output level	0～2	0	-
P08	AMIX	Alarm output mix	0～2	1	-
P39	DO_S	Digital output selection	0～7	0	-

12.4.2 [P39: DO_S] Digital output selection

By changing the parameter "P39: Digital output selection ", the function of digital output DO1 can be selected.

■ Digital output DO1 selection

P39: Digital output selection	Function	Description
0	PQ number switching completion output	When switch the PQ selection number, if the pressure command, flow rate command reach the goal, it will become ON.
1	Motor running output	It will become ON when the motor power is on.
2	High-pressure side running output	It will become ON, if only the high pressure side runs.
3	(Reserved for system)	(Reserved for system)
4	Pressure and flow coincidence output	It will become ON, when the flow rate or pressure match.
5	Pressure coincidence output	It will become ON , when the pressure matches.
6	Flow rate coincidence output	It will become ON , when the flow rate matches.
7	Fully charged Output	It will become ON, if the main circuit is charged fully.

■Pressure coincidence / Flow rate coincidence detection

The current pressure and flow rate can be detected, when the pressure or flow rate command value is within a certain range.

The coincidence detection range, by setting a percentage of the command value, is limited by the coincidence detection minimum.

No.	Sign	Name	Range	Factory Default Setting	Unit
P41	PCMW	Pressure coincidence detection range	0～99	5	%
P42	PCMM	The minimum value of pressure coincidence detection	0.0～99.9	0.1	MPa
P43	QCMW	Flow rate coincidence detection range	0～99	5	%
P44	QCMM	The minimum value of flow rate coincidence detection	0.0～99.9	0.2	L/min

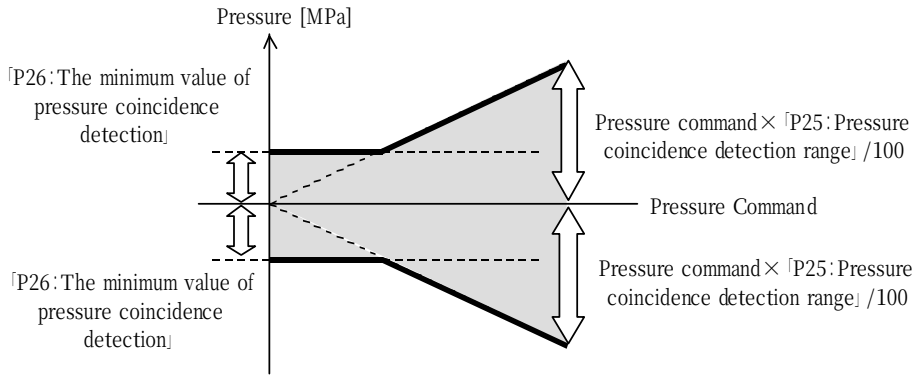

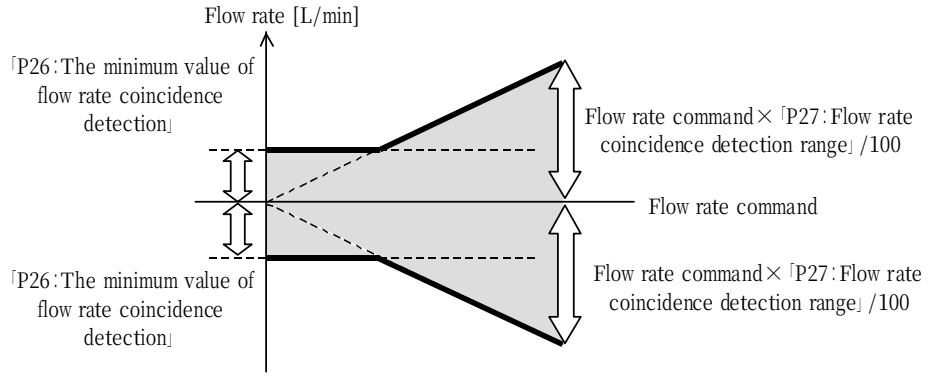

The timing diagram of the coincidence signal output is shown in the following figure.

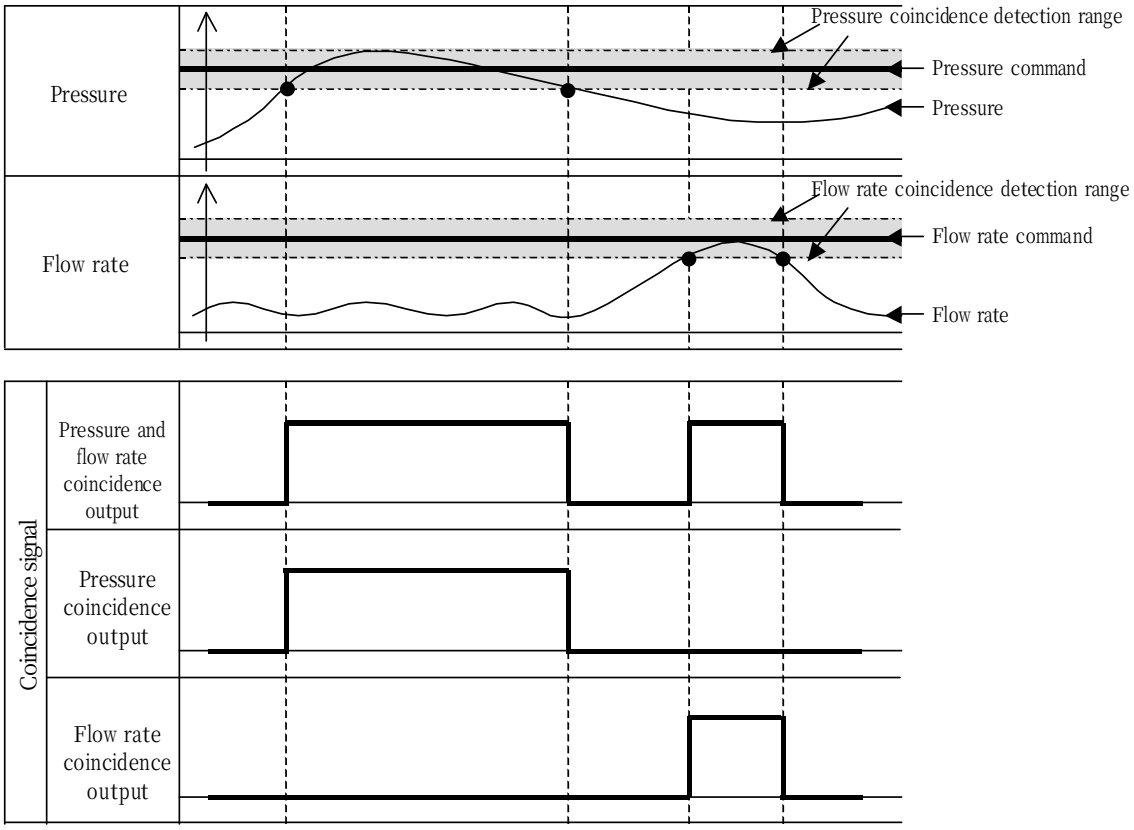

12.4.3 [P08: AMIX] Alarm mix output, [P07: WN_M] Warning output level

By changing the parameter `P08: Alarm mix output' 'P07: Warning output level', the digital output DO2 and contact output function can be selected.

◆ Digital output DO2 and contact output

<table>
<tr><th colspan="2">Parameter</th><th colspan="2">Output signal</th></tr>
<tr><th>P08
Alarm mix output</th><th>P07
Warning output level</th><th>Digital output DO2</th><th>Contact output</th></tr>
<tr><td rowspan="3">0 or 2</td><td>0</td><td>Alarm
ON: Normal
OFF: Alarm</td><td rowspan="3">Pressure switch</td></tr>
<tr><td>1</td><td>Alarm or Warning
ON: Normal
OFF: Alarm
ON⇔OFF: Warning</td></tr>
<tr><td>2</td><td>Alarm or Warning
ON: Normal
OFF: Alarm or Warning</td></tr>
<tr><td rowspan="3">1</td><td>0</td><td rowspan="3">No output</td><td>Alarm or Pressure switch</td></tr>
<tr><td>1</td><td rowspan="2">Alarm or Pressure switch or Warning</td></tr>
<tr><td>2</td></tr>
</table>

12.5 Pressure switch setting

By the pressure switch function, the digital signal detecting the pressure decrease can be output.
By this function, the external pressure switch is not required. So, the system can be formed at low cost.
Please refer to "12.4.1 Parameters" for the method of setting the pressure switch output signal.

12.5.1 Parameters list

No.	Sign	Parameter Name	Range	Factory Default Setting	Unit
P01	SW_L	Pressure switch operating level	0～35.0 (0: Function disabled)	0.0	MPa
			0～507 (0: Function disabled)	0.0	×10PSI
			0～350 (0: Function disabled)	0.0	%
P02	T_SW	Pressure switch output delay time	0.00～9.99	0.00	sec
P03	PSWH	Pressure switch display holding setting	0: Invalid 1: Display hold 2: Display and record	0	—
P08	AMIX	Alarm output mix	0: Individual output 1: Integrated output 2: Pressure switch function expansion	1	-
P38	P_DF	Pressure switch output dead zone	0.00～1.00	0.50	MPa
			0～145	72	PSI

12.5.2 Parameter description

<table>
<tr><th rowspan="2">Settings</th><th colspan="2">12.5.2 Parameter</th><th rowspan="2">Function</th></tr>
<tr><th>No.</th><th>Name</th></tr>
<tr><td>Panel display</td><td>P03</td><td>Pressure switch display holding setting</td><td>When the warning “L63: Pressure switch operation” occurs, you can keep the "L63" displaying on the operation panel.
And, you can register the “L63: Pressure switch operation” in the alarm history.

<table><tr><th>Value</th><th>L63 display holding</th><th>Register in the alarm history</th></tr><tr><td>0</td><td>Do not hold</td><td>Do not register</td></tr><tr><td>1</td><td>hold</td><td>Do not register</td></tr><tr><td>2</td><td>hold</td><td>Register</td></tr></table>
During the L63 display holding, if key is pressed, the display will be canceled.</td></tr>
<tr><td rowspan="3">Pressure drop detection</td><td>P01</td><td>Pressure switch</td><td>Setting the working pressure of the pressure switch.
Pressure switch function will be disabled, if the setting value is "0".
The setting unit for this parameter is set in the "P08 Alarm output mix".</td></tr>
<tr><td>P02</td><td>Pressure switch output delay time</td><td>The delay time is from the time the pressure decreases below “P01: Pressure switch operating level”, to the time the pressure drop is confirmed.</td></tr>
<tr><td>P08</td><td>Alarm output mix</td><td>The setting unit of "P01: Pressure switch" can be selected, as shown in the following table.
If you changed the some relevent settings, it will be enabled by turning on the power again.

<table><tr><th>P08</th><th>Working pressure of "P01: Pressure switch"</th><th>Unit</th></tr><tr><td>0 or 1</td><td>Fixed value</td><td>[MPa]</td></tr><tr><td>2</td><td>The ratio of the pressure setting of each PQ number</td><td>[%]</td></tr></table></td></tr>
<tr><td>Pressure return detection</td><td>P38</td><td>Pressure switch output dead zone</td><td>Setting the pressure threshold value for determining the pressure return, after the pressure switch being actuated.
Setting by the difference of the positive direction for:" P01: pressure switch".</td></tr>
</table>

■Changing the pressure switch unit by ” P08 Alarm output mix”

◆Pressure Unit：the setting value of “P08：Alarm output mix” is “0” or “1”

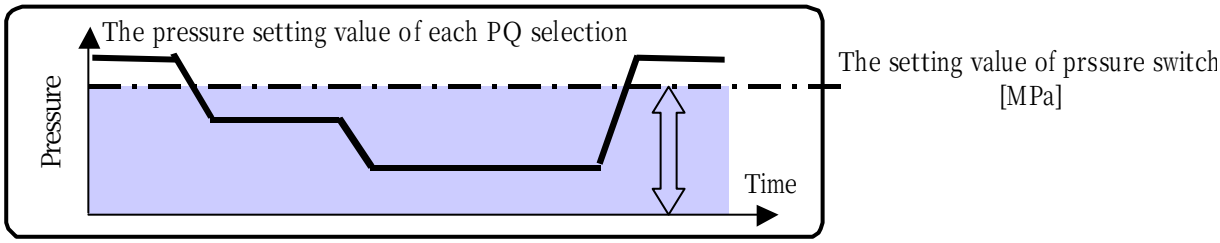

◆Pressure Unit：the setting value of “P08：Alarm output mix” is “2”

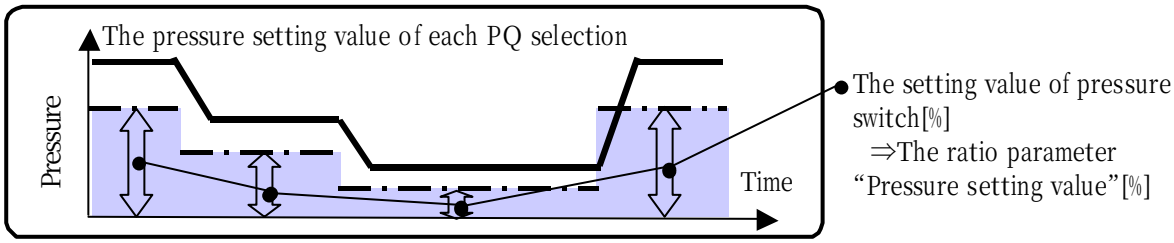

■Pressure switch working example

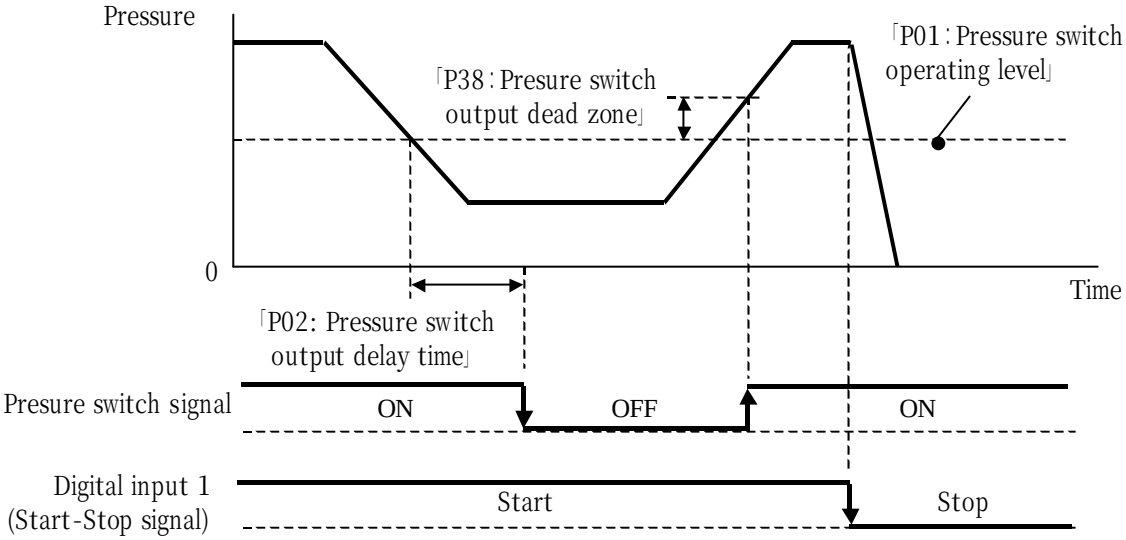

12.6 Other functions

12.6.1 [P12: W_TM] Solenoid valve response delay time at the time of switching PQ selection

After switching the PQ pattern, it will change the pressure command or the flow rate command after a delay determined by this parameter.
Please adjust it, if you want to change pressure or flow rate, and avoid the instability in switching solenoid valve.

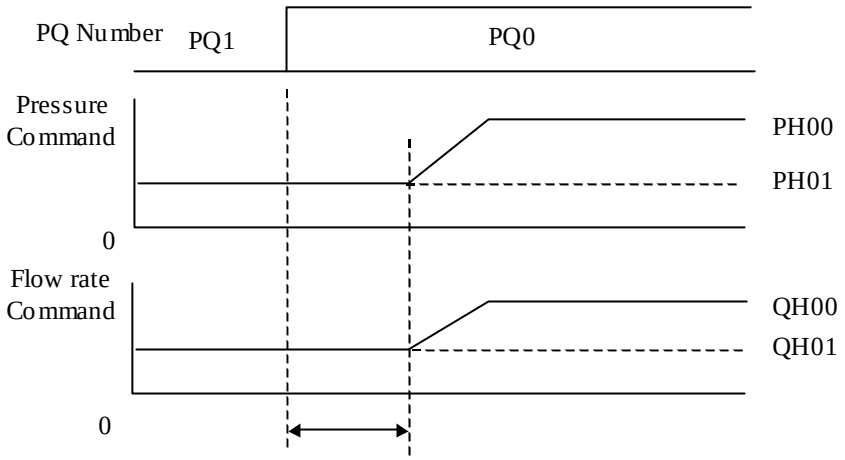

[P12: Solenoid valve response delay time]

Display	Sign	Parameter name	Range	Factory Default Setting	Unit
P12	W_TM	Solenoid valve response delay time	0.00～9.99	0.00	sec

12.6.2 [P32: S_TM] and [P33: L_IN] Suppression of surge during start-up

When start from stopped state, increasing in the slope of the following command and output, the occurrence of pressure surge will be suppressed.

- Pressure command
- Flow rate command
- Motor output

Display	Sign	Parameter name	Range	Factory Default Setting	Unit
P32	S_TM	Surge less start-up time	0.01～9.99	0.5	sec
P33	L_IN	Motor start initial response gain	1～999	10	—

■Command at unit start, and change of motor output

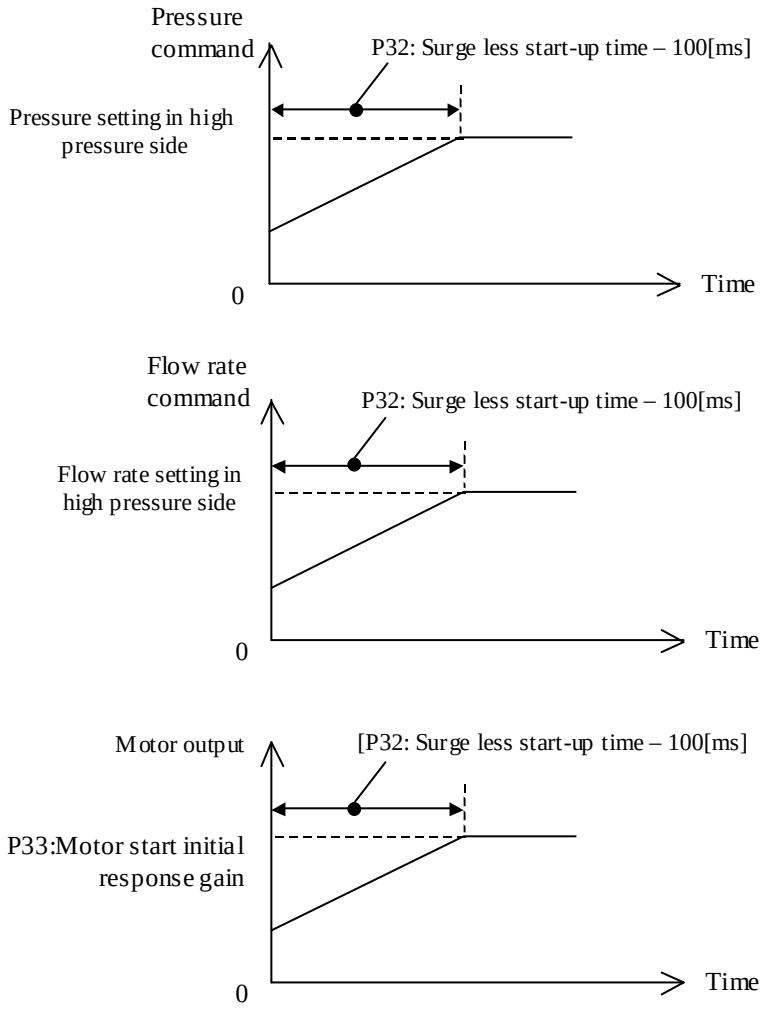

12.6.3 [P45: AC_F] AC fan start-stop signal synchronization settings

It is possible to start / stop the AC fan in synchronism with the pump start / stop signal by “DIN1: Start-stop signal”. The power consumption and noise when the pump is stopped can be reduced.

Display	Sign	Parameter name	Range	Factory Default Setting	Description	Reference
P45	AC_F	AC fan motor synchronization	0: Always operation 1: Synchronized operation	0	It can start / stop the AC fan in synchronization with the start / stop signal.	—

Note	If the AC fan stops, the motor temperature will rise. If start the AC fan again, it will not be a malfunction.

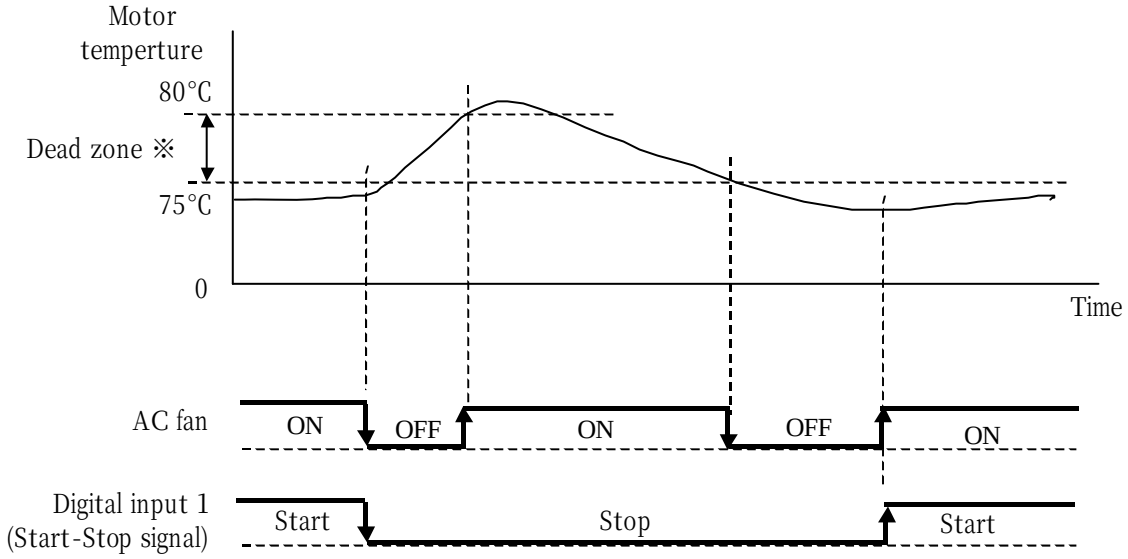
Motor
temperture
80°C
Dead zone ※
75°C
0
Time
AC fan
ON
OFF
ON
OFF
ON
Digital input 1
(Start-Stop signal)
Start
Stop
Start

Chapter 13 Troubleshooting

13.1 Protection function

13.1.1 Output signal of the protection function

The table below is output signal of the protection function, depending on the setting of parameter "P08: Alarm output mix".

○: Circuit is conducting ×: Circuit is not conducting

Alarm Description	P08: Alarm output mix					
	0: Individual output 2: Pressure switch function expansion			1: Integrated output		
	Relay output		Digital output DO2	Relay output		Digital output DO2
	A contact	B contact		A contact	B contact	
Power OFF	×	○	×	×	○	×
Power ON: Normal	○	×	○	○	×	×
Alarm occurs	Indefinite	Indefinite	×	×	○	×
L63: Pressure switch operation	×	○	○	×	○	×
Warning occurs	○	×	(*1)	×	○	×

(*1) : It depends on the setting of ”P07: Warning output level setting”. Please refer to "12.4.1 Parameters" for more information.

13.1.2 Alarm

If the protection function is activated, the alarm will be raised. And the alarm code below will be displayed on the operation panel.
If an alarm occurs, the pump will be stopped, and the alarm signal will be output. Please refer to the "13.1.1 Output signal of the protection function " for more information.

◆ Alarm reason and countermeasures

Alarm Code	Name	Reason	Countermeasure
E09	**Output device error 1** Overcurrent protection of the output device is activated	Layer short of the motor coil	・ Replace the motor pump
		Short circuit of the motor	・ Replace the motor pump
		Damage of the controller	・ Replace the controller
		Encoder connector is disconnected	・ Connect the encoder connector
		Damage of the encoder harness	・ Replace the encoder harness
		Failure of the encoder	・ Replace the motor pump
E10	**Output device error 2** Overcurrent protection of the output device is activated	Layer short of the motor coil	・ Replace the motor pump
		Short circuit of the motor	・ Replace the motor pump
		Damage of the controller	・ Replace the controller
		Encoder connector is disconnected	・ Connect the encoder connector
		Damage of the encoder harness	・ Replace the encoder harness
		Failure of the encoder	・ Replace the motor pump
E11	**Instantaneous overcurrent** Motor output current exceeded the specified value	Encoder connector is disconnected	・ Connect the encoder connector
		Damage of the encoder harness	・ Replace the encoder harness

Alarm Code	Name	Reason	Countermeasure
		Failure of the encoder	• Replace the motor pump
		Failure of the controller	• Replace the controller
E12	**Overspeed** Motor rotation speed exceeded 120% of the maximum rotational speed	Failure of the encoder	• Replace the motor pump
		Failure of the controller	• Replace the controller
		Noise	• Add a noise filter
E13	**Regenerative brake overcurrent** Current exceeds the specified value at the time of regeneration	Regenerative resistor is short circuit	• Replace the resistor
		The resistance of the regenerative resistor is too small	• Check the resistance value of the regenerative resistor
		Motor regenerative energy is too large	• Enlarge the acceleration time and deceleration time. • Lighten the load.
E14	**Regenerative brake overload** Overload protection of regenerative resistor is activated.	Power supply voltage is out of the specification range	• Check the power supply voltage in monitor mode [n12: main circuit voltage], and make it in the required range
		During deceleration the braking force is too large	• Reduce the parameter value of " P13 ~ P28: deceleration time setting" • Reduce the value of "P05: Load command rate at the time of regeneration", "P06: Regenerative load ratio command at the time of deceleration"
E15	**Undervoltage** Main circuit voltage becomes less than DC190V	The power supply voltage is low	• Check the power supply voltage in monitor mode [n12: main circuit voltage], and make it in the required range
		Re-turn on the power when the display is not completely disappeared	• Re-power when the display is completely disappeared
		Failure of the controller	• Replace the controller
E16	**Overvoltage** Main circuit voltage becomes more than DC400V	Power supply voltage is high	• Check the power supply voltage in monitor mode [n12: main circuit voltage], and make it in the required range
		Failure of the controller	• Replace the controller
		Rapid deceleration in PQ selection switching	• Reduce the parameter value of " P13 ~ P28: deceleration time setting" • Reduce the value of "P05: Load command rate at the time of regeneration", "P06: Regenerative load ratio command at the time of deceleration"
E17	**Motor electronic thermal error** Overload protection is activated by electronic thermal	Load torque is large	• Replace the motor pump
		Defects in motor control due to the effect of noise	• Replace the controller
		Defects in motor control due to the effect of noise	• Add a noise filter

Alarm Code	Name	Reason	Countermeasure
E18	**Magnetic pole detection error** Magnetic pole detection is not completed within the specified time	Abnormality of the output device	・ Replace the controller
E20	**Encoder disconnection** Encoder cable break	Disconnection or connection failure of the encoder harness	・ Replace the encoder harness
E21	**Motor cable disconnection** Motor cable is disconnected	Disconnection of the motor wiring	・ Replace the motor cable
		Failure of the output device	・ Replace the controller
E30	**Pressure sensor error** Pressure sensor is short-circuited or disconnected	Pressure sensor connector is not connected	・ Connect the connector
		Corruption of the pressure sensor harness	・ Replace the pressure sensor harness
		Failure of the pressure sensor	・ Replace the pressure sensor
		Failure of the controller	・ Replace the controller
E31	**Motor start error** The command and actual motor rotation is more than the setting value of parameter "P34: Motor start-up abnormality judgment time"	Load volume is large	・ Increase the parameter value "P34: Motor start-up abnormality judgment time"
		Damage of the encoder harness	・ Replace the encoder harness
		Motor cable is disconnected or poor contacted	・ Correctly connect the motor cable
		Failure of the encoder	・ Replace the motor pump
E40	**Motor thermistor disconnection** Motor thermistor is short-circuited or disconnected	Motor thermistor cable is disconnected	・ Replace the thermistor
		Failure of the controller	・ Replace the controller
E41	**Motor temperature abnormal rise** Motor temperature exceeded the specified value over 30 seconds or more	Motor cooling fan is stopped	・ Replace the fuse for motor cooling fan ・ Replace the motor cooling fan ・ Replace the controller
		Radiator is clogged	・ Replace or clean the radiator
		Rotation speed of the motor is rising	・ Check the leakage amount in the main unit side circuit ・ Check the setting of the high-pressure safety valve ・ Replace the motor pump
		The ambient temperature is high	・ Install it in the place where the ambient temperature is within the required range ・ Install in well-ventilated place
		Failure of the controller	・ Replace the controller
E42	**Radiator fin thermistor cable break**	Fin thermistor cable is disconnected	・ Replace the thermistor

Alarm Code	Name	Reason	Countermeasure
	The heat dissipation fin thermistor is short-circuited or disconnected	Failure of the controller	・ Replace the controller
E43	**Fin temperature abnormal rise** Fin temperature exceeded the specified value over 30 seconds or more	The cooling fan for controller is stopped	・ Replace the fuse for cooling fan ・ Replace the cooling fan ・ Replace the controller
		Radiator is clogged	・ Replace or clean the radiator
		Rotation speed of the motor is rising	・ Check the leakage amount in the main unit side circuit ・ Check the setting of the high-pressure safety valve ・ Replace the motor pump
		The ambient temperature is high	・ Install it in the place where the ambient temperature is within the required range ・ Install in well-ventilated place
		Failure of the controller	・ Replace the controller
E64	**Drying operation error** Start the pump when the oil level is low	Oil level is low	・ Inject the hydraulic oil
		Stop valve is closed	・ Open the stop valve
		It takes time to suction oil	・ Reduce the parameter value of "P35: Dry running judgment pressure ", "P36: Dry running judgment time "
E91	**CPU is out of control**	CPU is out of control	・ Accidental abnormal (It is possible to continue)
		Program execution time is abnormal	・ Replace the controller or control board
E93	**EEPROM data error (1)** The stored parameter setting value is out of range	EEPROM data error	・ The "E94" or "E93" and the abnormal parameter is displayed alternately on the display panel. Please set the setting value of the displayed parameter number within its range
E94	**EEPROM data error (1)** The stored parameter setting value is out of range	EEPROM data error	

13.1.3 Warning

The actual pressure and the following warning code is displayed alternately on the operation panel, if a warning occurs. The warning signal will be output in accordance with the setting values of parameters. Please refer to "13.1.1 Output signal of the protection function" for more information.
In warning state, the unit will continue operating. However, there is a possibility that the protection function will be activated and an alarm will be generated, if you continue operating, ignoring the warning state.

◆Warning causes and countermeasures

Warning Code	Name	Reason	Countermeasures
L44	**Motor temperature abnormal warning** Motor temperature exceeded	Motor cooling fan is stopped	・ Replace the fuse for motor cooling fan ・ Replace the motor cooling fan ・ Replace the controller

Warning Code	Name	Reason	Countermeasures
	the specified value 83℃ for 10 seconds or more	Radiator is clogged	・ Replace or clean the radiator
		Rotation speed of the motor is rising	・ Check the leakage amount in the main unit side circuit ・ Check the setting of the high-pressure safety valve ・ Replace the motor pump
		The ambient temperature is high	・ Install it in the place where the ambient temperature is within the required range ・ Install in well-ventilated place
L45	**Fin temperature abnormal warning** Fin temperature exceeded the specified value 73 ℃ for 10 seconds or more	The cooling fan for controller is stopped	・ Replace the fuse for cooling fan ・ Replace the cooling fan ・ Replace the controller
		Radiator is clogged	・ Replace or clean the radiator
		Rotation speed of the motor is rising	・ Check the leakage amount in the main unit side circuit ・ Check the setting of the high-pressure safety valve ・ Replace the motor pump
L50	**Supply voltage drop warning** The main circuit DC voltage is under the specified value DC430V (power supply voltage AC304V) for 2sec	Power supply voltage is low	・ Make sure the power voltage is the specified value.
		Controller fail	・ Replace the controller
L60	**Pressure deviation abnormal warning** Current command is saturated	The power supply voltage is low	・ Check the power supply voltage in monitor mode [n12: main circuit voltage], and make it in the required range
		Pump failure	・ Replace the motor pump
		Encoder phase is shifted by noise (no F)	・ Add a noise filter
L62	**Pressure drop warning** Pressure switch has been activated continuously for 30 seconds or more	The settings of the pressure switch is wrong	・ Check the settings
		Oil leak from the main machine	・ Repair the main machine to stop the leakage
L63	**Pressure switch activation** Pressure switch is activated	Pressure becomes less than the setting value of the parameter "P01: Pressure switch"	・ If there is no abnormality in main machine, please review the parameter settings for the pressure switch. Please refer to the "12.5 Pressure switch setting" for more information.

13.2 Periodic inspection

⚠ CAUTION
● Please wear gloves and protective glasses. And please work after turning the power OFF.

- Please note that the foreign matters may enter your eyes at the time of air blow.
- Please note that the oil will flow out from the pipe during decomposition. And please make sure that there is no residual pressure in the pipe.
- If the hydraulic oil in the pipe and cylinder came back to the tank, there is a risk of overflow from the tank. Do not let the hydraulic oil in the cylinder flow to the tank. Please let the oil return to the oil pan.
- Please make sure that there is no abnormal vibration, abnormal sound or heat generation in this product.

Item	Inspection Time	Inspection Method
◇Hydraulic oil ・Oil level check ・Oil temperature check ・Oil color check	 ・At any time ・At any time ・Once / half a year	 ・Please make sure you have enough oil. Check the hydraulic oil for whitish muddiness and air bubbles. ・Make sure that the oil temperature is 60℃ or less. (Normally, use the oil at 15 to 50℃.) ・Deterioration of hydraulic oil can be checked by color. If the hydraulic oil turns brownish (ASTM L4 level: bright yellow), replace it. * Please check the "3.2.2 Product Common Specifications" for specification of the hydraulic oil.
◇Motor cooling fan ◇Motor body	・Once / a month ・Once / a month	・Please confirm the motor cooling fan is rotating, and the dust is not accumulated. ・If the dust is accumulated on the end, the cooling effect will be fall. Please clean it. ・Please confirm the ambient temperature is not too high.
◇Controller	・Once / a month	・Please confirm the dust is not accumulated in the air inlet of the lower surface. ・Please confirm the dust is not accumulated in the cooling fan on the top. ・Please confirm the cooling fan is rotating normally, and the dust is not accumulated. ・Please confirm the ambient temperature is not too high.。
◇Electrical wiring	・Once / half a year	・Please ensure that there are no damage or cracks in the cable dressing. ・Please measure the insulation resistance, and make sure that there is no degradation of insulation resistance. ・Please check whether it is securely grounded.
◇Gear pump	・At any time	・In case of oil leakage from the oil seal, replace the pump. Because the leaked oil is discharged from the oil groove on the motor side, please confirm there is no oil leakage in inspection.
◇Screws / pipes ◇Hose	・At any time ・At any time	・Check screws and pipes for looseness and oil leak. ・Check the hose for cracks, fracture or flaws.

・During operation, please do not approach and touch the rotating parts, such as the motor cooling fan.
・When you touch the controller inside part, in order to prevent electric shock, please observe the following procedures.

① Please turn off the main power of the controller. (Please turn off the breaker of the entire machine's power supply circuit.) In order to prevent malfunction, please hung an operation prohibition caution tag, such as "operation disabled (work in progress)", on the power supply breaker.

② Please wait 5 minutes or more after turning OFF the power supply of the controller. Because the large-capacity capacitor is installed in the controller, there is a risk of electric shock if the capacitor is charged. Please make sure that 5 minutes or more (the time it takes to discharge in the capacitor) have passed.

③ Please attach covers to the controller terminals before turning ON the power.

13.3 Cleaning and replacement

Item	Inspection Time	Inspection Method
● Oil tank ・Oil replacement	Once / year	Replace hydraulic oil periodically. If the oil is used without replacement for a long period, it has bad influences on operation and service life of the hydraulic unit.
● Oil cooler ・Cleaning of core	Once / year	Disassemble and clean the oil cooler and the core according to “13.4 Oil cooler maintenance procedure (only for unit type SUT03)” .
● Oil filling port (Air breather)	Once / year	Disassemble and clean the oil filling port (air breather) according to “13.5 Oil filling port (air breather) maintenance procedure”.
● Suction strainer	Once / year	Disassemble and clean the suction strainer according to “13.6 Suction strainer maintenance procedure”.
● Return filter	If the indicator shows that the filter is clogged, replace the filter element.	Perform according to “13.7 Replacement of the return filter element”.

⚠ DANGER

- Please do not approach and touch the rotating parts.
- When you touch the controller inside part, in order to prevent electric shock, please observe the following procedures.
  i) Please turn off the main power of the hydraulic unit.
  Please turn off the main power of the controller. (Please turn off the breaker of the entire machine’s power supply circuit.) In order to prevent malfunction, please hung an operation prohibition caution tag, such as "operation disabled (work in progress)", on the power supply breaker.
  ii) Remove the lid of the controller after turning OFF the power supply 5 minutes or more.
  Because the large-capacity capacitor is installed in the controller, there is a risk of electric shock if the capacitor is charged. Please make sure that 5 minutes or more (the time it takes to discharge in the capacitor) have passed.
- Please attach covers to the controller terminals before turning ON the power.

13.4 Oil cooler maintenance procedure (only for unit type SUT10, SUT16)

⚠ WARNING

- Please stop operation and turn off the main power before maintenance.
- Please wear gloves and protective glasses.
  i) Please pay attention to the fin portion of the core because it is sharp.
  ii) Please note that the foreign matters may enter your eyes at the time of air blow.

⚠ CAUTION

- Please do not apply strong force to the connector and the power supply line of the AC fan while working.
- Please note that the oil will flow out from the pipe or oil cooler during decomposition.

13.4.1 Removing the oil cooler

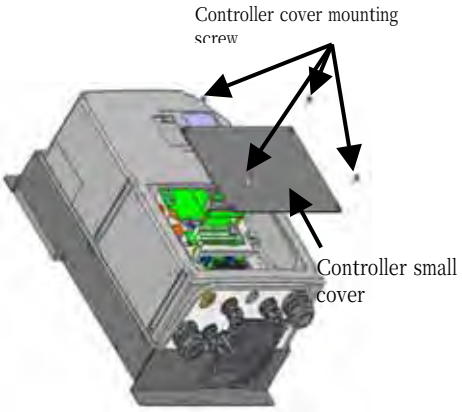

① Loosen the cross-recessed truss head machine screws (M4×4, Fastening torque: 1.0N · m) of the full cover, and remove the full cover.Then disconnect the connector of the fan, the fan earth cable.

② Remove the insulation lock which ties the fan harness.

③ Remove the hose bands (at two places), and disconnect the hoses (two pieces) at the top of the oil cooler. At this time, oil may leak due to backward oil flow from the tank. Before conducting this step, attach a blind plug to each hose.

④ Remove the hexagon socket head bolts (M5×16: 2 pieces) with washers, and dismount the oil cooler.

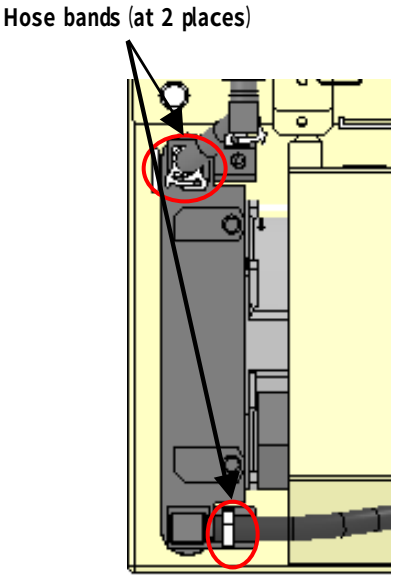

《Unit top view》

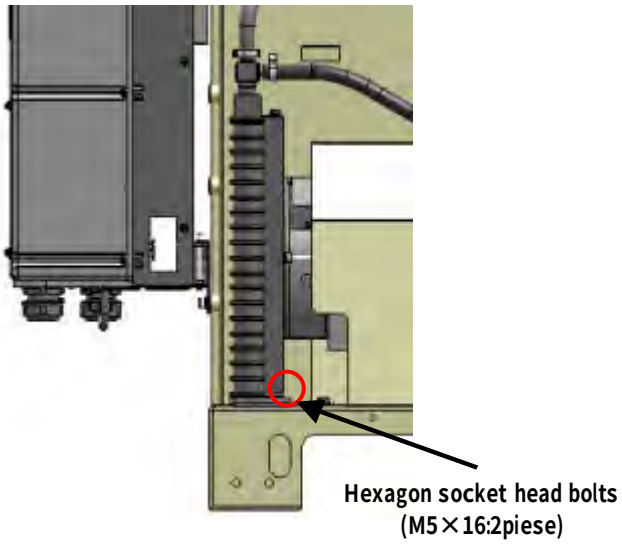

《Unit front view》

13.4.2 Disassembling the oil cooler

① Remove the cross recessed hexagon head bolts (M5×L12: 2pieces), and separate the shroud from the core.
② Remove the cross recessed head machine screws (M4×L70: 2 pieces), and separate the AC fan and finger guard from the shroud.

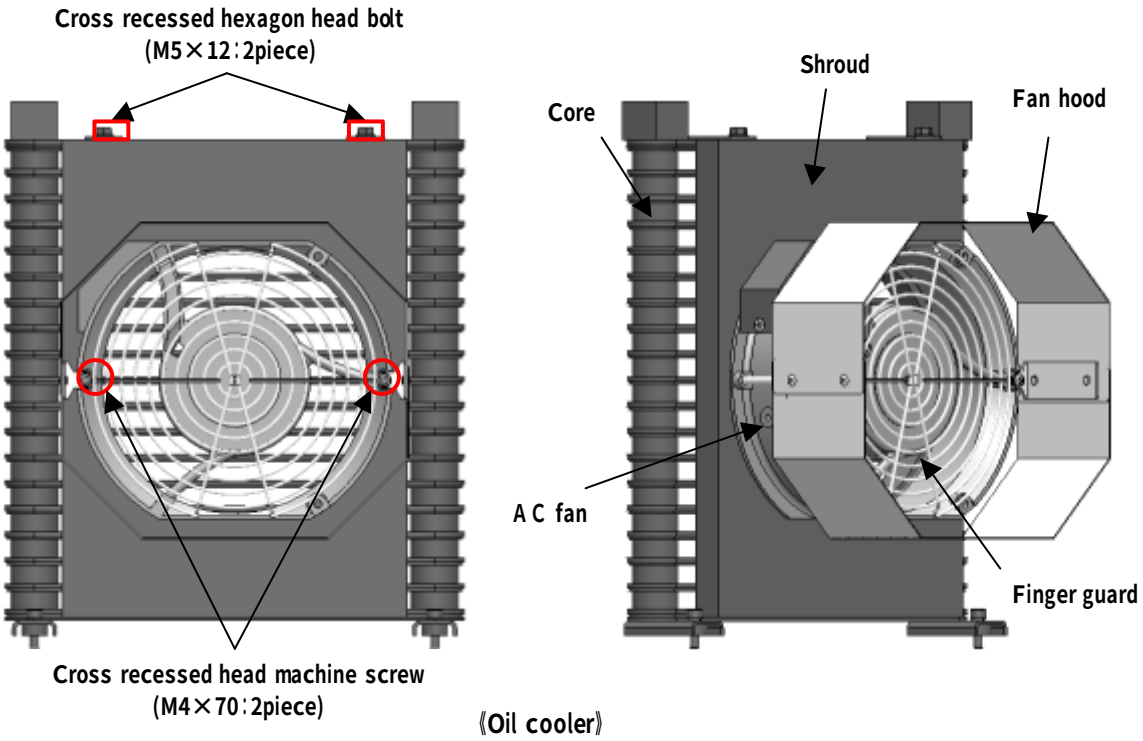

13.4.3 Clean the core

Blow air or steam onto the core, and clean the fins by blowing off dust accumulated on/adhering to the fins. When cleaning the fins, make sure that the dust blown away can not enter the core.

13.4.4 Clean the AC fan

Clean the clearance between the blade periphery and the casing, as well as the blades and the casing, by using a cloth.

⚠ CAUTION
● Never attempt to blow steam or air onto the fan motor. Because foreign material may be blown into the motor.

13.4.5 Reassembling the oil cooler

After completing the cleaning, reassemble the oil cooler. After reassembling, conduct the test run procedure according to "Chapter 10 Test Run" to make sure that the hydraulic unit normally operates.
Check if the oil cooler air intake / exhaust direction is correct. (Refer to 7.2.1 Ensuring air intake / exhaust space)

13.5 Oil filling port (air breather) maintenance procedure (only for unit type SUT10, SUT16)

13.5.1 Removing method

The cap can be easily removed by turning it counterclockwise by hand.

13.5.2 Cleaning method

Blow air onto the filter to blow off dust accumulated on/adhering to the filter.
Remove dust from inside of the strainer cylinder.

13.5.3 Mounting direction

Mount the cap by turning it clockwise by hand until it stops.

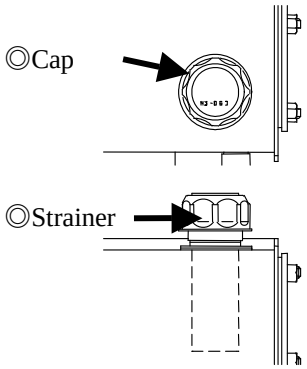

Oil port and air breather

⚠ WARNING
● During air blow, wear protective goggles to prevent accumulated substances or dust from touching your eyes.

13.6 Suction strainer maintenance procedure (only for unit type SUT10, SUT16)

13.6.1 Removing method

① After placing the oil receiving pan under the oil-drain port and opening the oil-drain plug (Rc1 / 2), drain all the hydraulic oil in the tank completely.

② After draining all the hydraulic oil in the tank, close the oil-drain plug again by seal tape. (Tightening torque: 64.0 ~ 70.0 N·m)

③ After draining hydraulic oil completely, remove the nuts (M8: 12 pieces) from the cleaning door cover, and remove the cover from the cleaning door.

④ Loosen the suction strainer by monkey wrench, and remove it.
(Hexagon nut, Width across flats: 41 mm)

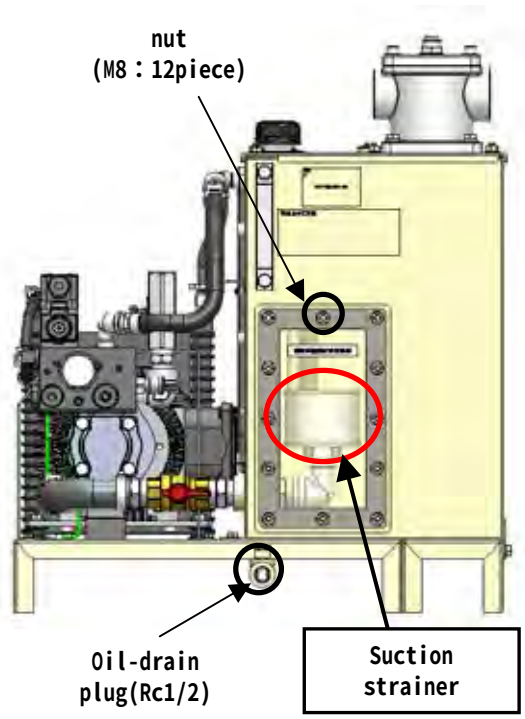

13.6.2 Cleaning method

Blow air onto the filter to blow off dust accumulated on/adhering to the filter. Remove dust from inside of the strainer cylinder.

13.6.3 Reassembling

After cleaning is completed, reassemble the suction strainer. Follow the removing procedure in reverse.
(Suction strainer: Tightening torque 39.0 N · m; Cleaning palate nut: Tightening torque 9.0 ~ 10.0 N · m)
After reassembling is completed, conduct the test run procedure according to "Chapter 10 Test Run" to make sure that the hydraulic unit normally operates.

⚠ WARNING
● During air blow, wear protective goggles to prevent accumulated substances or dust from touching your eyes.

13.7 Replacement of the return filter element (only for unit type SUT10, SUT16)

When the detector indicates that the filter is clogged (the indicator ring is raised to hide the green part of the indication column completely), replace the filter element according to the procedure below.
When the unit stopped, the indication column will always be green. Only in operation, the red indication column will appear.

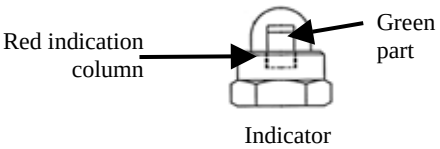

1. Loosen the hexagon socket head bolts [1] that fasten the cover [4], and pull the cover upward. Now, you can remove the element [6] together with the cover.
2. To remove the element, pull out the snap pin [11], loosen the element tightening nut [10], and remove the parts [7] to [9].
3. Replace the element with a new one, and re-mount it according to the above procedure in reverse.
4. Tighten the hexagon socket head bolts [1] in a crisscross order thoroughly.(Tightening torque 9.0 ~ 10.0 N · m)

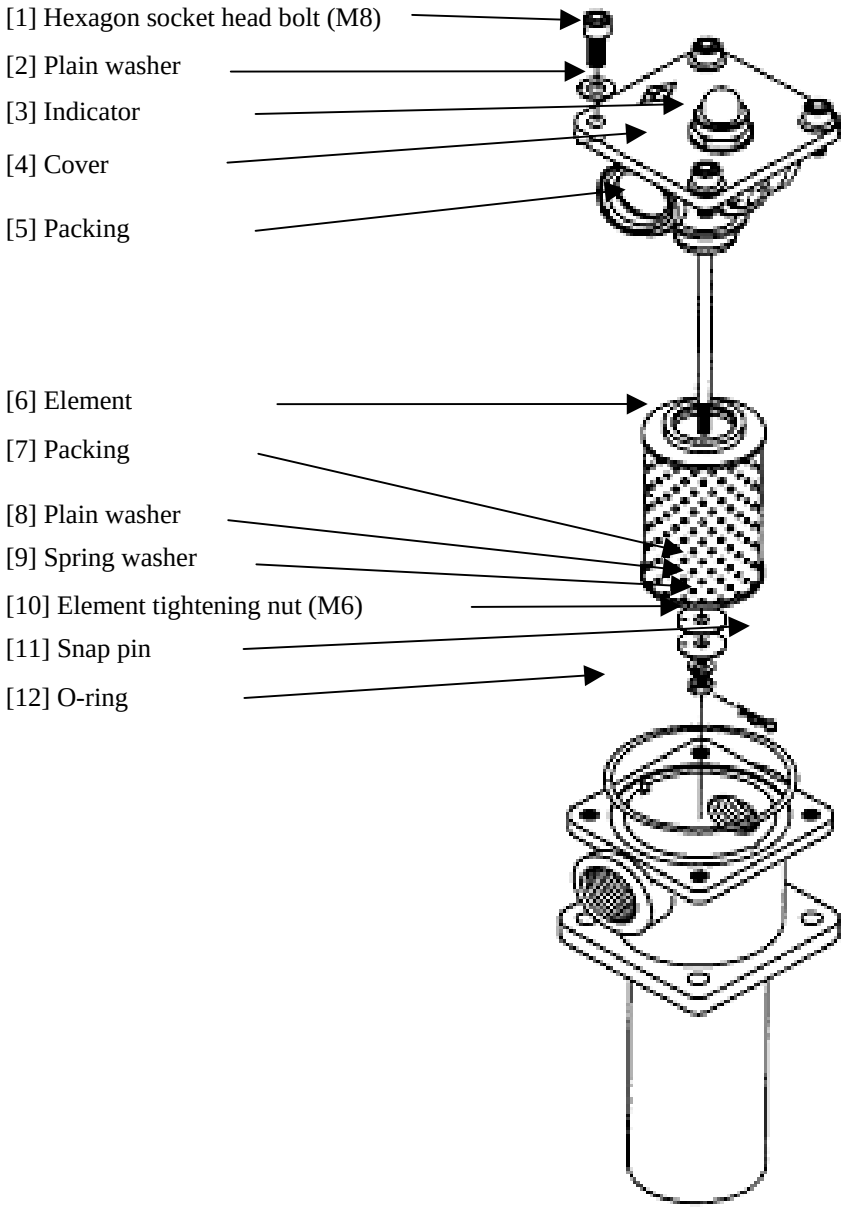

13.8 High-pressure Safety Valve Adjustment Procedure

In the following three conditions, please re-adjust the setting of the high-pressure safety valve, by referring to "High-pressure Safety Valve Adjustment Procedure" described below.

1. Even if the hydraulic unit is used with the maximum pressure setting, the safety valve will not be activated under normal pressure control (except for the transient period when the circuit is blocked due to stop of the master machine hydraulic actuator). However, the safety valve set pressure will be lowered due to long-term repeated operations and contaminants in the hydraulic oil. If the safety valve is activated even with normal conditions, safety valve adjustment is required.
   [Judgment criteria]
   - The hydraulic oil temperature rising time is shorter than before.
   - When the safety valve adjusting screw is turned in the tightening direction, the rpm indication in the pressure hold status is lowered.
2. To minimize surge pressure that much exceeds a setting pressure, safety valve adjustment is required in consideration of the withstand pressure of the hoses being used.
3. When the pressure set value is changed from the factory setting.
   In order to suppress the surge pressure for protecting actuator and pressure gauge, it is recommended that the pressure setting of the safety valve should be the following value showing in the table below.

●Recommended safety valve setting pressure

Product type	Pressure setting of high-pressure safety valve
SUT00S8007 / SUT10S8007	Maximum operating pressure +0.5MPa (7.5MPa)
SUT00D8021 / SUT10D8021 SUT16D8021	Maximum operating pressure +2.0MPa (22.6MPa)

[High-pressure Safety Valve Adjustment Procedure]

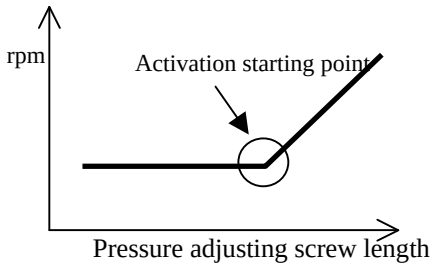

[1] Referring to the enlarged view of the high-pressure safety valve shown in the next page, loosen the lock nut.
(M10 lock nut, Width across flats: 14 mm)

[2] According to the pressure adjusting screw length reference chart, determine the screw length corresponding to a desired control pressure setting. The reference chart is different depending on different model.Refer to the table below, and refer to the reference chart in the next page.
(The adjustment screw tip has been chamfered in 7mm width.)

[3] Turn ON the hydraulic unit power supply, and select the setting mode through panel key operation. Then, set a desired pressure.

[4] Select [n05] (rpm display) in the monitor mode through panel key operation to show the current rpm.

[5] Adjust the pressure adjusting screw length in the longitudinal direction, and find an activation starting point as shown on the right.

[6] Turn the pressure adjusting screw 1/8 cycle clockwise from the activation starting point.

[7] Tighten the lock nut. The safety valve adjustment procedure is completed.

(When tightening the lock nut, be careful not to allow the adjusting screw to turn.)

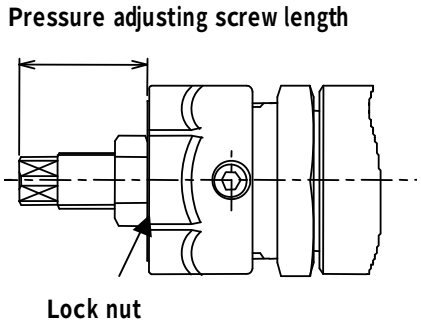

《Saftey valve detail drawing》

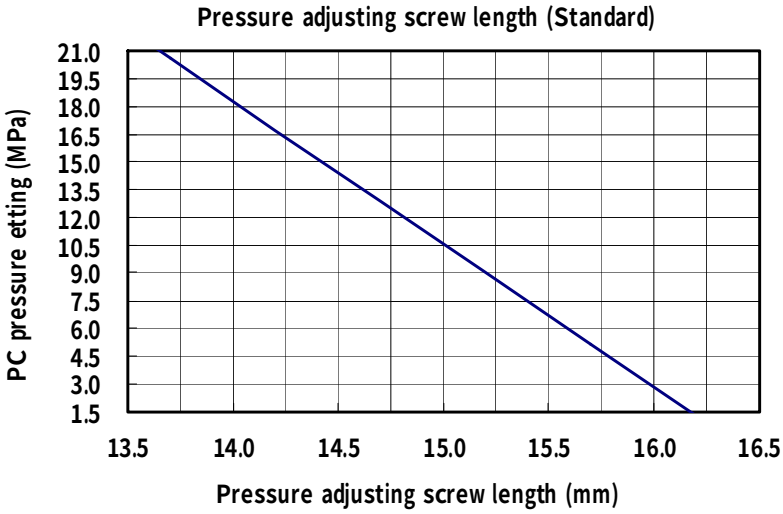

Chapter 14 Output Signal Timing Chart

About the start-stop signal (digital input 0), the setting value of [P11: start-stop signal switching] is "1" (default).
If the setting value of [P11: start-stop signal switching] is changed to "0", the ON and OFF of the start-stop signal (digital input 0) will be inverted.

14.1 Timing chart when the power is turned on

14.1.1 When the setting value of "P08: Alarm output mix" is "0" or "2"

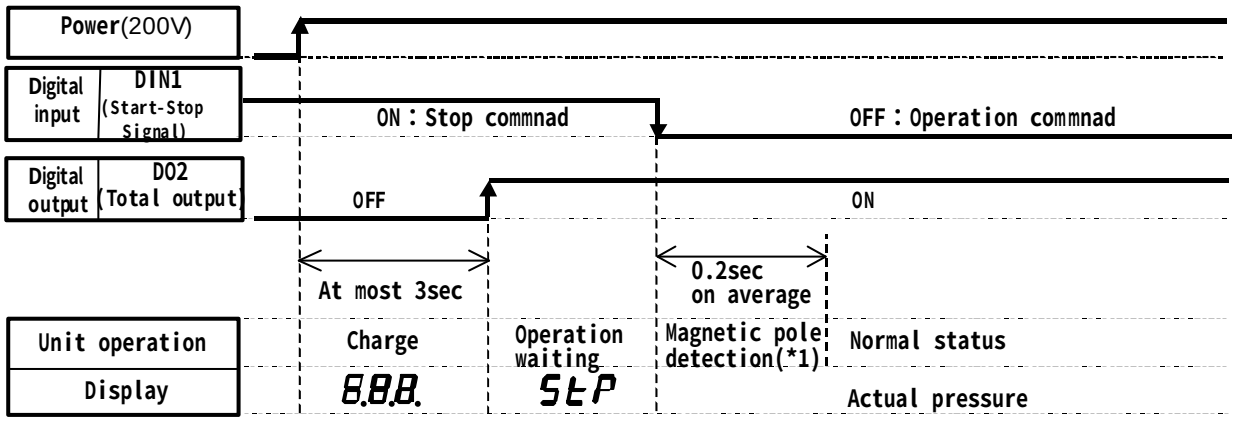

14.1.2 When the setting value of "P08: Alarm output mix" is "1"

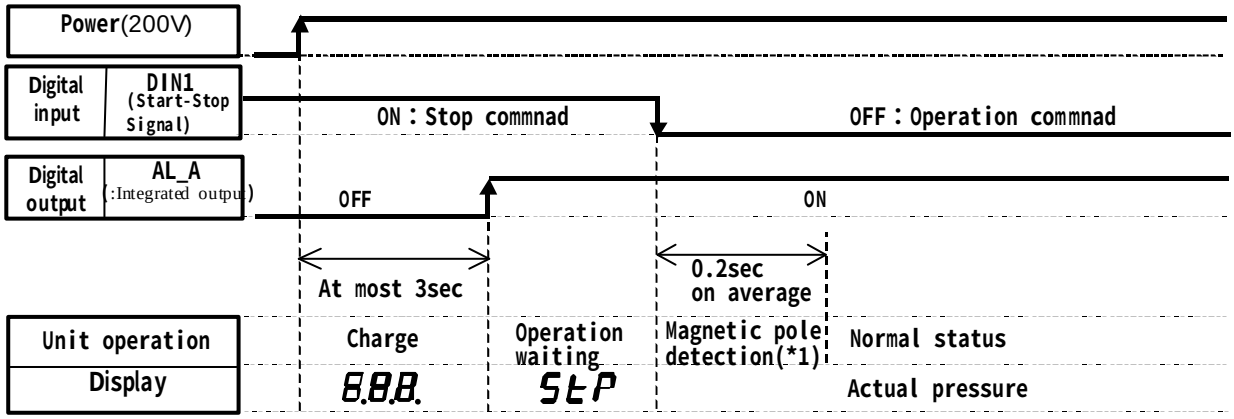

*1 Magnetic pole detection is performed only when the motor start at the first time after turning on the power.

14.1.3 Timing chart of PQ selection switch

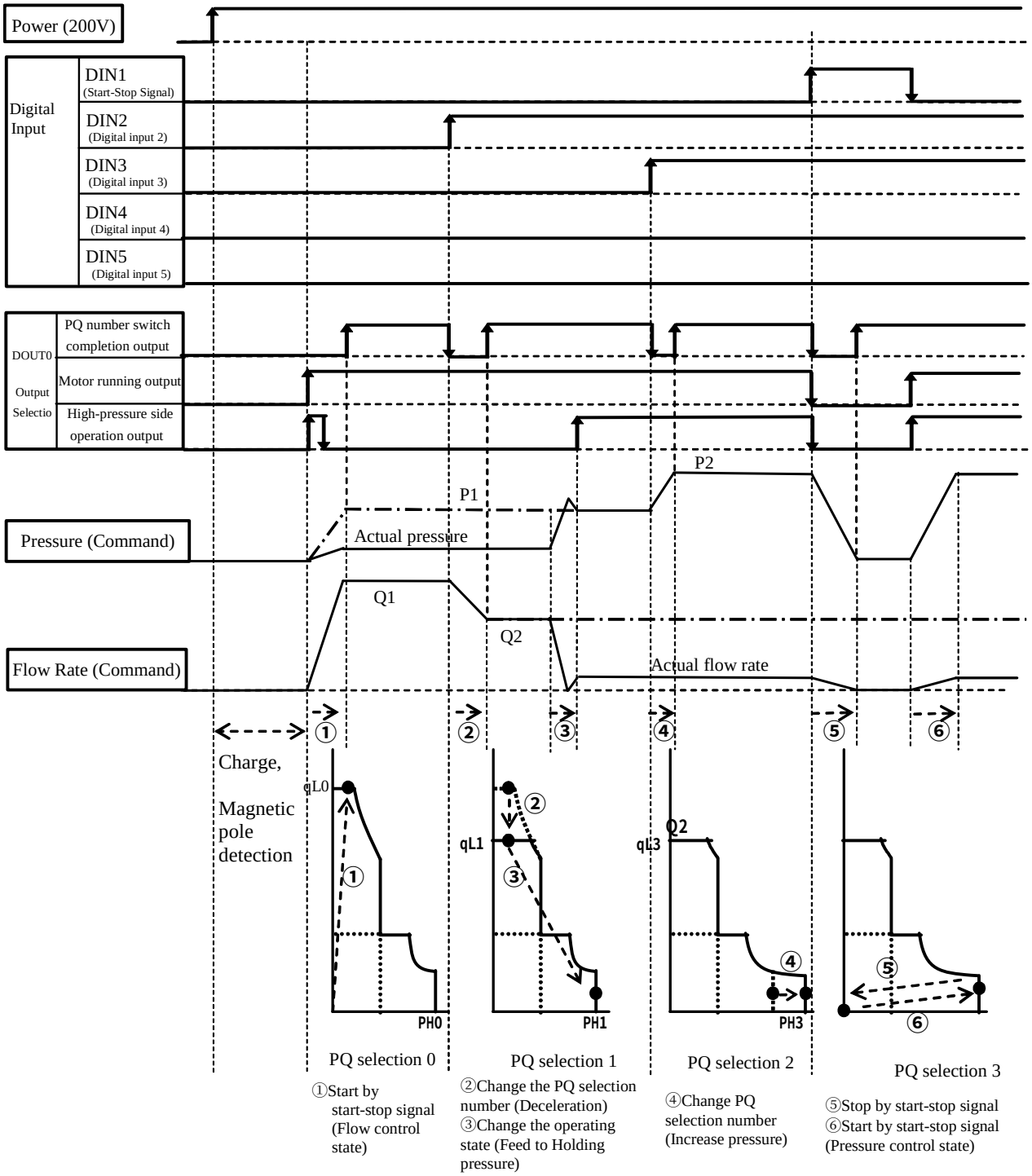

PQ selection	Pressure setting	Flow rate setting
0	P1	Q1
1	P1	Q2
2	P2	Q1
3	P2	Q2

Chapter 15　Hybrid-Win (Maintenance and Management Function)

Hybrid-Win is a tool that can manage and read the information in Daikin hybrid system (such as, Super Unit, EcoRich, Oil Cooler) by a computer. You can monitor or set parameters efficiently, by Windows in the computer.

■ Main functions

① Display graph

Pressure, flow rate, other monitor data in the inverter, and graph can be displayed.
You can quickly check the operation of test run, adjust parameters such as constant time, and investigate the cause of the trouble.

② Read, write, edit, save the parameter

The setting time can be significantly reduced, by editing or writing the parameters on computer. In addition, it becomes easier to read, save or administrate.

③ Read, save the alarm history

You can quickly find the parts that require maintenance, and reduce the downtime. This can be used as a guide to know the maintenance time or consumables replacement time by the "running time". The troubleshooting, such as measures, the diagnosis of the alarm cause can be displayed.
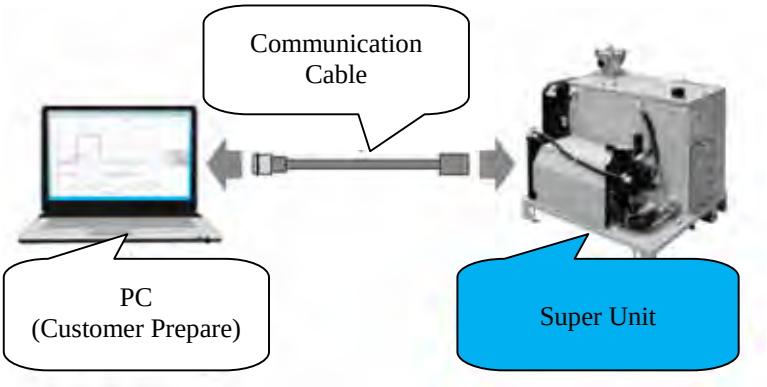
*Hybrid-Win is a software tool that monitors the internal state by PC. You can download the instruction manual and the software free, at home page (http://www.daikinpmc.com/) with user registration.
* Communication cable is sold separately.
* For some models, the monitor harness is necessary.
* By adding a wireless module, it can connect to the factory LAN or Smartphone (Option).
  The remote monitoring, inspection, and maintenance can be realized.